CITY
OF
BEREA, KENTUCKY

LAND MANAGEMENT
AND
DEVELOPMENT ORDINANCE

ADOPTED September 5, 2007
LAST AMENDED May, 2009

TABLE OF CONTENTS

		Page
ARTICLE I	**INTRODUCTION**	
100	**Overview**	**1**
ARTICLE II	**GENERAL PROVISIONS**	
200	**Title**	**2**
201	**Authority**	**2**
202	**Purpose**	**2**
203	**Jurisdiction**	**2**
204	**Minimum Requirements**	**2**
205	**Consistency and Other Provisions**	**3**
206	**Separability and Severability**	**3**
207	**Relation to the Comprehensive Plan**	**3**
208	**Repeal of Conflicting Ordinances**	**3**
209	**Effective Date**	**3**
ARTICLE III	**ADMINISTRATION AND ENFORCEMENT**	
300	**The City of Berea**	**4**
301	**The Planning Commission**	**4**
302	**Board of Adjustments**	**4**
303	**Department of Planning & Codes**	**5**
304	**Codes Administrator**	**5**
305	**Penalties**	**5**
306	**Architectural Review Board_____**	**6**
ARTICLE IV	**THE USE OF LAND AND STRUCTURES**	
400	**Purpose**	**8**
401	**Procedures**	**8**
402	**Certificates of Land Use Restrictions**	**15**
403	**Conditional Use Permits**	**16**
404	**Variances**	**17**
405	**Non-Conforming Uses and Structures**	**18**
406	**Land Use Classification and Designation**	**20**
407	**The Official Zoning Map**	**31**
408	**Supplementary Regulations**	**33**
409	**Overlay Districts**	**39**
410	**Parking Requirements**	**43**
411	**Sign Regulations**	**49**
412	**Cellular Antenna Towers**	**59**
413	**Outdoor Lighting**	**60**

ARTICLE V	**THE DIVISION AND DEVELOPMENT OF LAND**	**Page**
500	**Purpose**	**65**
501	**Authority**	**65**
502	**Administrative Procedures**	**66**
503	**Plat/Development Requirements**	**76**
504	**Enforcement**	**79**
505	**Plats of Record**	**79**
506	**Land Sold In Violation**	**80**
507	**Appeals**	**80**
508	**Design and Improvements**	**80**
509	**Community Facilities and Open Space**	**96**
510	**Agreements and Guarantees**	**97**
ARTICLE VI	**DEFINITIONS**	**98**

APPENDICES

A	**Cement Concrete for Street, Curb and Gutter, Sidewalk & Driveway Construction**
B	**Asphalt Concrete Pavement for Street and Driveway Construction**
C	**Typical Detail Sections for Sidewalks, Storm Sewers, Joint Details, Catch Basins**
D	**Storm Water Drainage Systems**
E	**Zone Change Application**
F	**Board of Adjustment Applications**
	Request for Variance/Conditional Use Permit
	Notice of Appeal; Decision of Board of Zoning Adjustment
G	**Application for Land Subdivision and Development**
G	**Code Administrator's Development Plan Review**
G	**Land Surveyor's Review of Preliminary Plat**
G	**Land Surveyor's Development Plan Review**
G	**Land Surveyor's Final Plat/Major Plat Review**
G	**Land Surveyor's Review of Planned Unit Development (PUD)**
G	**Land Surveyor's Final Plat/Minor Plat Review**
G	**As-built Checklist**
H	**Fee Schedule**
I	**Mobile/Manufactured Home Parks/Communities**
J	**Hazardous Waste Management**
K	**Regulation of Cellular Antenna Towers**
L	**Chestnut Street Overlay District Design Guidelines**
M	**North Broadway Overlay District**
N	**Sign Permit Application**
O	**Grading and Fill Material**

ARTICLE I
INTRODUCTION

100 OVERVIEW

This ordinance is designed to guide land use management together with land division and development decisions in the City of Berea, Kentucky as a means of implementing the Berea Comprehensive Plan. It is the desire of the City of Berea and the Berea Planning Commission that the use of this document will facilitate the orderly development of the City in the future.

The sequence of land management and development in the City usually begins with a determination of how the land is to be used. Following this decision, the land may need to be divided into additional tracts or parcels (subdivided) prior to the final step involving the physical development of the land. This ordinance consists of two primary elements: (1) The Use of Land and Structures (formerly covered in the Zoning Ordinance), and 2) The Division and Development of Land (formerly covered in the City's Subdivision Regulations).

The ordinance has been written in such a way as to provide a degree of flexibility in the use, development, and management of land while being careful to protect the health, safety, and general welfare of citizens. One goal of the ordinance is to recognize the unique qualities of the Berea community and to insure that these qualities receive appropriate consideration in the overall development process. A second goal is to avoid excessive regulation and costs associated with land use and development decisions. An additional goal is to spell out in an organized and easily understood format (in sufficient detail) how the overall land use management, division, and development process functions within the City of Berea.

ARTICLE II
GENERAL PROVISIONS

200 TITLE

This ordinance shall be known and may be cited to as the Berea Development Ordinance. The Official Zoning Map is hereby made a part of this ordinance. Certified copies of this ordinance and map are on file with the planning Commission, City clerk, and Madison County clerk.

201 AUTHORITY

These regulations are adopted under the authority granted in Kentucky Revised Statutes (K.R.S.) Chapter 100.

202 PURPOSE

The purpose of this ordinance is to promote public health, safety, morals, and the general welfare of the City of Berea, Kentucky, to facilitate orderly and harmonious development, to preserve the aesthetic or historical character of the area, and to regulate the density of population and the intensity of land use in order to provide for adequate greenspace, light, and air. In addition, this ordinance is designed to provide for vehicle parking and loading space, as well as to facilitate police and fire protection, prevent the overcrowding of land, blight, danger, and congestion in the circulation of people and commodities, and prevent the loss of life, health, or property from fire, flood, or other dangers. These regulations are used also to protect airports, highways, and other transportation facilities, public grounds and facilities, historic districts, primary agricultural land and other natural resources, and other specific areas of the City which need special protection.

203 JURISDICTION

On and after the date of adoption, these regulations shall govern the use of land and structures and the subdivision of land within the corporate limits of the City of Berea and extend to such areas beyond the corporate limits as may be specified in agreements between the City of Berea and Madison County, and set out on a map adopted in said agreements.

204 MINIMUM REQUIREMENTS

In their interpretation and application, the provisions of this ordinance shall be held to be minimum requirements. The Planning Commission may require standards above the minimum contained herein whenever it finds that the protection of public health, safety, and welfare warrants such increases. Examples include the provision of infrastructure in excess of the stated minimum, when it is deemed necessary to provide future development on adjacent sites.

205 CONSISTENCY WITH OTHER PROVISIONS

Whenever there is a discrepancy between minimum standards set forth in these regulations and those of other lawfully adopted rules, regulations, resolutions, or ordinances, the most restrictive or highest standard shall apply.

206 SEPARABILITY AND SEVERABILITY

Should any section *or* provision of these regulations be for any reason held void or invalid by any court of competent jurisdiction, it shall not affect the validity of any other clause, section or provision thereof which is not itself void or invalid.

207 RELATION TO THE COMPREHENSIVE PLAN

The implementation of these regulations is closely related to the attainment of goals and objectives contained in the current Comprehensive Plan for Berea, Kentucky. The sections of the plan dealing with land use and subdivision development should serve as primary reference points in administering these regulations.

208 REPEAL OF CONFLICTING ORDINANCES

All ordinances or parts of ordinances in conflict with this ordinance or inconsistent with the provisions of this ordinance are hereby repealed to the extent necessary to give this ordinance full force and effect.

209 EFFECTIVE DATE

This ordinance shall become effective from and after the date of its approval and adoption by the City of Berea,
Kentucky

_____
Mayor, City of Berea Kentucky

_____
Date

ARTICLE III
ADMINISTRATION AND ENFORCEMENT

300 THE CITY OF BEREA

The City Council of the City of Berea is the body of elected officials responsible for overall governance of land within its jurisdiction. Its specific responsibilities as pertain to planning; land use, and development activities are as follows:

1) Development, adoption, administration, and amendment of laws, regulations, and rules for conduct of governmental affairs.
2) Adoption of the goals and objectives of the comprehensive plan which serves as the general guide for future growth and development.
3) Final determinations regarding all applications for land use changes, and oversee the administration of subdivision regulations and building codes.

301 THE BEREA PLANNING COMMISSION

The Berea Planning Commission is a nine (9) member body, selected by the Mayor of Berea with concurrence of the City Council. The Commission's responsibilities as provided for in K.R.S. 100:

1) Preparation and adoption of the comprehensive plan;
2) Review of and revisions to the comprehensive plan;
3) Review and act upon all applications for the subdivision of land and development plans;
4) Review and make recommendations to the appropriate governmental body on all applications for amendments to the land use regulations and official land use map;
5) File certificates of land use restrictions

302 THE BOARD OF ADJUSTMENT

The City of Berea Board of Adjustment consists of five (5) members appointed by the Mayor, and has the following responsibilities as pertains to this ordinance (KRS 100.217):

1) Hear and decide applications for conditional use permits;
2) Act on applications for non-conforming uses and structures;
3) Act on applications for variances;
4) Hear and decide cases where it is alleged by an applicant that there is an error in any order, requirement, decision, grant, or refusal made by the administrative official in the enforcement of these regulations.

303 DEPARTMENT OF CODES AND PLANNING

The City of Berea Department of Codes and Planning shall be responsible for administration of the

Berea Development Ordinance within the City limits and such extra-territorial jurisdiction as may be specified in agreements between the City of Berea and the Madison County Fiscal Court.

304 CODES ADMINISTRATOR

A Codes Administrator shall be appointed by the Mayor to administer the Development Ordinance. The Codes Administrator may be designated to issue building permits and certificates of occupancy in accordance with the literal terms of the regulation, but may not have the power to permit any construction, or to permit any use or any change of use which does not conform to the literal terms of the Development Ordinance.

305. PENALTIES

305.1 Any person or entity who violates any of the provisions of KRS 100.201 to 100.347 or any of the regulations adopted pursuant thereto for which no other penalty is provided, shall upon conviction, be fined not less than ten dollars ($10) but not more than five hundred ($500) for each conviction. Each day of violation shall constitute a separate offense.

305.2 Any person, owner, or agent who violates the provisions of KRS 100 shall, upon conviction be fined not less than one hundred dollars ($100) nor more than five hundred dollars ($500) for each lot or parcel which was the subject of sale or transfer, or a contract for sale or transfer.

305.3 Any person who intentionally violates any provision of KRS 100.3682 to 100.3684 shall be guilty of a misdemeanor punishable by a fine of not less than one hundred dollars ($100) nor more than five hundred dollars ($500).

305.4 The procedure for citations issued by an enforcement officer shall be as provided in KRS 431.015, and KRS 65.8825

306. ARCHITECTURAL REVIEW BOARD

306.1 Architectural Review Board Established

To implement the provisions of Section 409 (Overlay Zone Provisions), there is hereby Established pursuant to KRS 82.670 a Board of Architectural Review for the City of Berea, Kentucky, hereinafter referred to as the Board, consisting of five (5) members. Members shall be appointed by the Mayor, subject to approval of the City Council. At least one member shall possess expertise in architecture, urban design, urban planning, historic preservation, or other appropriate field; at least one shall possess expertise in building design and construction; and at least one shall be a member of the Berea Planning Commission; the remaining members may be citizen members. Members shall assume their duties at the first regular meeting after their appointment.

306.2 Terms of Members

A.) The members of the Architectural Review Board shall serve terms of three (3) years, except that the initial appointments shall be as follows: One (1) member appointed for a term of one (1) year; two (2) members appointed for a term of two (2) years; and two (2) members appointed for a term of three (3) years each.

B.) Any person who has served as a member of the Board for three (3) consecutive terms shall not be eligible for reappointment for at least one year. A term of less than one year shall be counted in determining eligibility for reappointment. This provision may be waived upon a finding that no other nominee is qualified to fill a designated position requiring particular expertise, as required by Section 306.1.

C.) Any member may be removed by the Mayor after confirmation by the City Council for repeated failure to attend meetings of the Board or for any other cause deemed sufficient by the Mayor and City Council .

D.) If any position on the Board becomes vacant due to resignation, removal, or for any other reason, the Mayor shall appoint a replacement within sixty (60) days for the remainder of the unexpired term, subject to approval by the City Council .

306.3 Compensation

Members of the Architectural Review Board shall receive as compensation the sum of fifty dollars ($50.00) for each board meeting actually attended.

306.4 Conflicts of Interest

Any member of the Board who has a personal or financial interest, either directly or indirectly, and any property which is the subject of, or is affected by, a decision of the Board concerning the property.

306.5 Liability of Members

Any member of the Board acting within powers granted by the Ordinance shall be relieved from personal liability for any damage and held harmless by the City. Any suit brought against any member of the Board shall be defended by a legal representative furnished by the City until the termination of the proceeds.

306.6 Duties

The duty of the Board is to promote the purposes and objectives of the Overlay Zone Ordinances which are, in part, to preserve and protect the distinctive characteristics of the Overlay Zone neighborhood, to assist in the review of design standards and development proposals in the Neighborhood, and to review all plans for construction and demolition pertaining to or affecting buildings, planting, and property in the Neighborhood. The Board shall have the power to approve, approve with modifications, or deny approval for such applications with the prescribed procedures and guidelines.

306.7 Appeals

A.) Any applicant denied a permit under this ordinance shall have the right of appeal from such written denial of the Architectural Review Board by filing a Written Notice of Appeal with the City Clerk within fourteen (14) days after the decision, notice or order was served or made effective. The filing fee for a Notice of Appeal shall be twenty-five dollars ($25.00) and shall be paid upon filing the Notice of Appeal. The City Clerk shall be the records custodian and administrator of all appeals from the Board.

B.) Any applicant may appeal the decision of the Architectural Review Board to the Madison Circuit Court. The appeal from action by the Architectural Review Board shall be taken within thirty (30) days of the date of such written denial.

ARTICLE IV
THE USE OF LAND AND STRUCTURES

400 PURPOSE

The purpose of this section is to protect and promote the general welfare, health, safety, and morals of the public by establishing regulations and standards to:

A. Preserve and protect the aesthetic quality, natural beauty, and character of the land and the natural resources.
B. Preserve, enhance, and protect the character and quality of life of the community.
C. Encourage the harmonious interaction of residential, commercial, industrial, public and semi-public, and agricultural land uses.
D. Promote and protect the safety of the public against fire, flood, or other hazards.
E. Promote and protect the safety and convenience of motorists and pedestrians.
F. Encourage the best possible use of the land while avoiding the undesirable effects of overcrowding, congestion, and mixture of incompatible uses.

401 PROCEDURES

401.1 AMENDING THE TEXT

As provided for in KRS 100.211, a proposal to amend the text of Article IV, The Use of Land and Structures, may originate with the Planning Commission or the City Council . Regardless of the origin of the proposed amendment, it shall be referred to the Planning Commission before adoption. The Planning Commission shall hold a public hearing after notice as required by K.R.S. 424, and make a recommendation as to the text of the amendment, and whether the text amendment shall be approved or disapproved, stating the reasons for its recommendation. In the case of a proposed amendment originating with the City Council , the Planning Commission shall make its recommendations within sixty (60) days of the date of its receipt of the proposed amendment. It shall take an affirmative vote of a majority of the City Council to adopt the proposed amendment.

401.2 AMENDING THE OFFICIAL ZONING MAP

A. Prior to application for amendment to the Official Zoning Map, the applicant is encouraged to have a conference with the Codes Administrator to discuss the proposed land use change.

B. Amendment application. A proposal to amend the Official Zoning Map may originate with the Planning Commission, the City Council, or the owner of the property in question. The application for amendment shall contain at least the following items:

1. Interest and Ownership. The applicant's name, address, and interest in the application and the name, address, and interest of every person, firm, or corporation represented by the applicant in the application, the name and signature of the owner or owners of the entire land area to be included within the proposed district and all encumbrances of such land and the names and addresses of owners of all adjacent property. If the applicant is not the owner, then the owner shall submit an affidavit certifying the person acting as a representative has the authority to act in his/her behalf..

2. Legal description and/or survey plat which contains metes and bounds that meet or exceed the current standards of practice for professional land surveyors in Kentucky. All zoning changes, irregardless of the legal description and/or survey plat, shall be construed as extending to the centerline(s) of adjacent public streets.
3. Reason for the amendment. The reason and justification for the proposed amendment shall be specifically set out and be consistent with the provisions of KRS 100.212.
4. Effect of the amendment. A statement giving the nature, description, and effect of the proposed amendment on surrounding land uses and properties must be included.
5. A development plan may be required by the Planning Commission in conjunction with the application, and shall be reviewed in keeping with Section 401.3. If a development plan is approved as part of the land use map amendment, a certificate of land use restriction must be filed in the County Clerk's Office.
6. No less than ten (10) days before the hearing on a proposed zoning map amendment by any person or entity other than the City of Berea, the applicant shall file proposed findings of fact with the Codes Administrator and the Corporation counsel, along with a summary of proposed testimony and a listing of proposed exhibits.

C. Planning Commission Action:

1. Following receipt of an application, the Planning Commission shall fix a reasonable time for a public hearing. Public notice shall be given in accordance with KRS Chapter 424; such notice shall include publication in a local newspaper of general circulation at least once and shall be made not less than seven (7) days nor more than twenty-one (21) days before the date of the hearing. The applicant shall also give notice at least 14 days in advance of the hearing by first class mail, return receipt requested, to the owners of the adjacent property. Adjacent property includes property contiguous to the site in question as well as property directly across the roadway. Copies of all returned receipts and affidavits of publication shall be presented to the Planning Commission as evidence of compliance prior to the hearing. In addition, the applicant shall post a notice on the property for fourteen (14) consecutive days. This notice shall be in compliance with KRS Chapter 100.212 and with any requirements established by the Planning Commission.

2. If the property that is proposed for a change in land use classification adjoins property in a different planning unit, notice of the hearing shall be given at least fourteen (14) days in advance of the hearing by first class mail to the Planning Commission of that planning unit.

3. If the City proposes to annex unincorporated or accept the transfer of incorporated territory, it may amend its comprehensive plan and the Official Zoning Map to incorporate and establish land use districts for the property proposed for annexation. If the City elects to follow this procedure, the Planning Commission shall hold a public hearing after the adoption of the ordinance, stating the City's intention to annex and prior to final action taken on the ordinance of annexation, for the purpose of adopting the comprehensive plan amendment and making its recommendations as to the classification of the land which will be effective for the property upon its annexation. Notice setting forth the time, date, location, and purpose for the public hearing shall be published as required by KRS Chapter 424 and shall be given to the owners of all properties within the area proposed for annexation and to adjoining property owners in conjunction with KRS 100.212(2). The City Council shall take final action on the

recommendations of the Planning Commission prior to adoption of the ordinance of annexation and shall include in the ordinance of annexation a map showing the land use district which will be effective for the annexed property. If the City elects not to follow this procedure, the newly annexed territory shall remain subject to the same land use restrictions as applied to it prior to annexation, until those restrictions are changed by an amendment to the Official Zoning Map or other regulations in accordance with KRS 100.209.

4. The requirements of this Development Ordinance are based on recommendations included in the Berea Comprehensive Plan. KRS 100.212 requires that before any amendment to the Official Zoning Map is granted, the Planning Commission must first find that the proposed map amendment is in agreement with the Comprehensive Plan, or in the absence of such a finding, that one or more of the following apply:

   (A) That the original land use classification given to the property was inappropriate, and that the proposed land use classification is appropriate, or

   (B) That there have been major changes of an economic, physical, or social nature within the area involved which were not anticipated in the adopted comprehensive plan, and which have substantially altered the basic character of such area.

5. The Planning Commission shall hold a public hearing and shall make a finding of fact which shall be recorded in the minutes and records of the Planning Commission. The Planning Commission may vote to approve, reject, or defer action on the proposed amendment. After voting, the Planning Commission shall make a report of its recommendations which shall include findings of fact, and forward its finding of fact and recommendation in writing to the City Council .

   The findings of fact shall include a summary of the evidence and testimony presented by the proponents and opponents of the proposed amendment. A tie vote shall be subject to further consideration by the Planning Commission not to exceed thirty (30) days, at the end of which if the tie has not been broken, the application shall be forwarded to the City Council without a recommendation for approval or disapproval (KRS 100.211).

6. No application for subdivision plat approval, development plat approval, or zoning map amendment, shall be reconsidered by the Planning Commission, or resubmitted to the Planning Commission within six (6) months of the meeting where such application is denied, unless:

   a. The applicant files an affidavit with the request for reconsideration or the resubmitted application setting out and demonstrating that the prior action of the Planning Commission failed to consider essential evidence making the original determination erroneous under the appropriate statutory standard, or subdivision regulation standard, and the Planning Commission;
   b. The new application is substantially different; or
   c. There has been a change of conditions or law under which the denial

was made.

In any such event, the Planning Commission must affirmatively vote to permit the resubmittal or reconsideration, and specifically set out the reasons thereof..

7. Action by the City Council :

(1) Recommendation of approval of requested zoning map amendment: Upon receipt of a Report of the Planning Commission recommending approval of a proposed zoning map amendment, the City Administrator shall place the matter on the agenda of the next regularly scheduled Council meeting for consideration fo the Council . The Council may (a) accept the recommendation fo the Planning Commission without a hearing or only argument-type hearing; (b) review the record made before the Planning Commission and make its own adjudicative facts which may differ from those of the
Commission; or (c) hold its own trial type hearing and make its own adjudicative facts which may differ from those made by the Planning Commission. If the Planning Commission recommends the requested map amendment, the City Council can override the recommendation by a majority vote of the membership of the legislative body.

(2) Recommendation of disapproval of requested zoning map amendment:
Upon receipt of a Report of the Planning Commission recommending disapproval of a proposed zoning map amendment, the matter shall not be submitted to the Council unless within thirty (30) days of the final action of the Planning Commission, the applicant or two (2) members of the City Council requests consideration by the Council . In such event, the Council shall determine whether to (a) accept the recommendation of the Planning Commission without a hearing, or (b) hold an argument-type hearing for review of the recommendation and the record made before the Planning Commission and make its own adjudicative facts which may differ from those of the Commission; or (c) hold its own trial type hearing and make its own adjudicative facts which may differ from those made by the Planning Commission.

(3) In the event that the Council determines to hold an argument-type hearing, the matter shall be placed on the next regularly scheduled Council meeting agenda, and (i) the Council members shall be provided record made at the Planning Commission; and specifically the application, minutes of the meeting, and the Report of the Planning Commission; (ii) shall have the opportunity to, but is not required to, review the videotape of the hearing where evidence was presented, and the opportunity to review any documentary evidence presented to the Commission; and (iii) the Council may hear arguments or statements in support or against the recommendation of the Planning Commission.

(4) In the event that the Council determines to hold its own trial-type hearing, the matter shall be placed on the next regularly scheduled Council meeting agenda, and the City Administrator shall advertise the matter for a public hearing. The Council members shall be provided with the record made at the Planning Commission; and specifically the application, minutes of the meeting, and the report of the Planning Commission, and the hearing shall proceed *de novo* with the applicant providing evidence and arguments in support of the proposed map amendment, and opponents afforded the opportunity to present evidence and arguments in opposition to the proposed map amendment.

8. When an application for a land use map amendment has been disapproved by the legislative body, an additional request for a change in land use for that tract of land or land included in that tract shall not be filed within six (6) months of the date of disapproval.

401.3 DEVELOPMENT PLAN REQUIREMENTS

1. As referenced in KRS 100.203 (2), the Planning Commission may require a development plan in conjunction with a proposal to amend the Official Zoning Map. The development plan must be approved before the proposal to amend the Official Zoning Map will be acted upon. Where agreed upon, this development plan shall be followed. A development plan is required also for all multi-family residential, commercial, and industrial development projects.
2. An application shall be submitted as part of any development plan, and shall be made on a form provided by the Codes Administrator. The application shall contain the following information:

    a) Name, address, and telephone number of the owner of all land within the building site (and developer, if different from owner);
    b) If the developer is not the owner, a notarized affidavit signed by the owner shall be submitted stating that the owner authorizes the developer to act on his behalf, and that the owner agrees to abide by any restriction or condition placed on the development plan;
    c) A legal description of the entire area to be developed;
    d) Copies of any documents pertinent to the development of the property, including deed restrictive covenants, easements, or encroachment permits;
    e) A brief concise description of the proposed usage of the property, including the anticipated number of employees or families, types of products produced or sold, services rendered, or any other related activities.
3. The Planning Commission may require the following information to be shown on a development plan drawn to scale and bearing the seal and signature of an architect, engineer, or land surveyor (as appropriate) bearing the seal of the Commonwealth of Kentucky.

    a) The boundary lines of the building sites and all lots or parcels which comprise the building site;
    b) The area of the building site in square footage or acreage;
    c) The type, location, and size or all utility and right-of-way easements which shall be labeled as existing or proposed;
    d) The deed book or plat cabinet reference numbers for all deeds or easements together with a copy of the deed;
    e) All existing and proposed final contours with benchmarks and the source of the contours.
    f) All existing natural features such as trees, sinkholes, streams, creeks, or other bodies of water
    g) The sizes and locations of all proposed or existing site improvements, including but not limited to:

        Off-street parking and loading areas

Buffer strips and open spaces
Service roads, fire lanes, and sidewalks
Vehicle entrance and access locations and dimensions
Paved areas and curb cuts
Fire hydrants and Fire Department connections
Landscaping
Guardrails, fences, or hedges
Signs
Exterior lighting
Electric, water, and gas meters
Trash collection areas
Sidewalks, pedestrian ways, bikeways, and trails

* *The Planning Commission may require such other on or off-site improvements which in its discretion are appropriate to promote the purposes in Section 202 and 400 of this Land Development Ordinance.*

h) Provisions for drainage of all surface water and soil erosion controls.

i) All existing and proposed buildings and other structures, and their proposed uses.

4. Development Plan Review Procedures:
Review - Upon receipt of a development plan prepared in accordance with the provisions above, the appropriate Codes Administrator shall immediately forward copies to the appropriate City officials and the Technical Advisory Committee which shall review the development plan for compliance with any applicable codes, ordinances, or standards.

All development plans shall include but are not limited to the items found in the "Codes Administrator's Review Items" and " Development Plan Land Surveyor's Review" found in Appendix G.

5. Recommendations:
The reviewing agencies shall review the plan for compliance with the standards, codes, or ordinances which they are responsible for administering, and report to the Planning Commission within the time frame recommendations provided for in the Department of Codes and Planning calendar.

6. Unless a development plan has been approved, only one (1) principal building may be erected on any lot or parcel of record in a R-3, B-1, B-2, PSF, INS, P-1, I-1, I-2 zone. Temporary structures are permitted during construction only.

7. Upon completion of the development plan requirements for a development and prior to the issuance of a certificate of occupancy, an as-built plan shall be submitted to the Codes office for review and compliance. Any substantive changes shall require the approval of the Planning Commission. An inspection shall be conducted by the Codes department and approval granted

prior to certificates of occupancy.

402 CERTIFICATES OF LAND USE RESTRICTION

402.1 In accordance with KRS 100.3681-100.3684, when land use restrictions are imposed to include variances, conditional use permits, conditional land use management conditions, unrecorded preliminary subdivision plats and development plans, but not including zoning map amendments which impose no limitations or restrictions upon the use of the property other than those generally applicable to properties within the same land use district and not including any recorded subdivision plat, a certificate of land use restriction must be completed by the appropriate body (Planning Commission, Board of Adjustment, or City Council) which finally adopts or imposes the land use restriction. The certificates shall be in the format provided for in KRS 100.3683 (see Appendix), and shall be filed with the County Clerk within thirty (30) days of the date upon which the body takes final action to impose or adopt the restriction. The City shall collect the County Clerks' filing fee from the applicant at the time any processing is initiated which may result in the imposition, adoption, amendment or release of any land use restriction. In addition the City may also charge the applicant a fee for reasonable cost of completing the certificate not to exceed ten dollars and fifty cents ($10.50), in addition to any other applicable filing or administrative fee, to compensate the City for completing and filing the certificate. The fees shall be refunded to the applicant in the event no land use restriction is imposed or adopted as a result of the proceeding. The County Clerk shall upon receipt of the fee, file and maintain these certificates among the official records of the office. The County Clerk shall index the certificates by property owner, and if applicable, name of subdivision or development. The County Clerk shall maintain in the office a record of the name and address of the agency having custody of the official zoning map.

When a restriction reflected on the certificate is amended, a new certificate shall be filed. In the case of such amendment or in the event the original restriction is released, the previous certificate shall be released by the secretary of the body which amended or released the restriction in the same manner as releases of encumbrances upon real estate.

The failure to file, file on time, or to complete the certificate properly or accurately shall not affect the validity or ability to enforce any land use restriction or regulation. An improper filing may be corrected by a subsequent proper filing. Nothing herein shall affect the running of time for any appeal or other act for which a time limit is prescribed in these regulations.

When a zoning map amendment is filed for more than five (5) contiguous properties, or a land use restriction is imposed upon two (2) or more properties or lots in the same proceedings, a single certificate shall be filed for all the properties or lots collectively, and a single fee shall be paid.

403 CONDITIONAL USE PERMITS

403.1 The Board of Adjustment shall have the power to hear and decide applications for conditional use permits to allow the proper integration into the community of uses which are specifically named in the Land Use Management Regulations which may be suitable only in specific locations in the district only if certain conditions are met (KRS 100.237), or which the Board determines by specific findings of fact are compatible with the character of the district. In applying for a conditional use permit, the applicant shall submit an application to the Codes Administrator and shall follow all procedures set forth in this chapter. The Codes Administrator shall then refer the application to the Board of Adjustment. The Board shall charge a fee (Appendix K) for reviewing all conditional use permit applications, and shall notify all adjacent property owners by certified mail of the time and place of the meeting at which the review will occur. The applicant shall pay costs of notification upon receipt of a statement from the appropriate City official.

403.2 The board may approve, modify, or deny any application for a conditional use permit, as provided for in Section 406.52 of this ordinance. If it approves such permit, it may attach necessary conditions such as time limitations, requirements that one or more things be done before the request can be initiated, or conditions of a continuing nature. Any such conditions shall be recorded in the board's minutes and on the conditional use permit along with a reference to the specific section in the regulations listing the conditional use under consideration. The board shall have the power to revoke conditional use permits, or variances for non-compliance with the condition thereof. Furthermore, the board shall have a right of action to compel offending structures or uses removed at the cost of the violator and may have judgment in personam for such cost.

403.3 Granting of a conditional use permit does not exempt the applicant from complying with all of the requirements of building, housing, and other regulations.

403.4 In any case where a conditional use permit has not been exercised within the time limit set by the board, or within one year if no specific time limit has been set, such conditional use permit shall not revert to its original designation, unless there has been a public hearing. "Exercised", as set forth in this section, shall mean that there are binding contracts for the construction of the main building or the improvement is under construction to a substantial degree or that prerequisite conditions involving substantial investment shall be under contract, in development, or completed. When construction is not part of the use, "exercised" shall mean that the use in operation is in compliance with the conditions as set forth in the permit.

403.5 The Codes Administrator shall review all conditional permits except those for which all conditions have been permanently satisfied, at least once annually and shall have the power to inspect the land or structure where the conditional use is located in order to ascertain that the landowner is complying with all of the conditions which are listed on the conditional use permit. If the landowner is not complying with the conditions on the conditional use permit, the Codes Administrator shall report the fact in writing to the chairman of the Board of Adjustment. The

report shall state specifically the manner in which the landowner is not complying with the conditions on the conditional use permit and a copy of the report shall be furnished to the landowner at the same time it is furnished to the chairman of the Board of Adjustment. The board shall hold a hearing on the report within a reasonable time, and notice of the time and place of the hearing shall be furnished to the landowner at least one week prior to the hearing. If the Board of Adjustments finds that the facts alleged in the report of the Codes Administrator are true and that the landowner has taken no steps to comply with them between the date of the report and the date of the hearing, the Board of Adjustment may authorize the Administrative Official to revoke the conditional use permit and take the necessary legal action to cause the termination of the activity on the land which the conditional use permit authorizes.

403.6 Once the Board of Adjustment has completed a conditional use permit and all the conditions required are of such type which can be satisfied completely and permanently, the Codes Administrator, upon request of the applicant, may, if the facts warrant, make a determination that the conditions have been satisfied and enter the facts which indicate that the conditions have been satisfied and the conclusion in the margin of conditional use permit which is on file.

403.7 When an application is made for a conditional use permit for land located in or abutting any residential district, written notice shall be given at least fourteen (14) days in advance of the public hearing on the application to the applicant, Codes Administrator, and owner of every parcel of property adjoining the property (and directly across the street) to which the application applies and such other persons as the regulations shall direct.

Written notice shall be by first class mail with certification by the board's secretary or other officer that the notice is mailed. It shall be the duty of the applicant to furnish to the board the name and address of any owner of each parcel of property as described in this subsection. Records maintained by the property valuation administrator may be relied upon to determine the identity and address of said owner. In the event such property is in condominium or cooperative forms of ownership, then the person notified by mail shall be the president or chairperson of the owner group which administers property commonly owned by the condominium or cooperative owners.

403.8 All conditional use permits approved by the Board of Adjustments shall be recorded at the expense of the applicant in the office of the county clerk.

404 VARIANCES

404.1 Pursuant to KRS 100.241 - 100.251, the Board shall have the power to decide on applications for variances. The Board may impose any reasonable conditions or restrictions on any variance it decides to grant. A variance applies to the property for which it is granted, and not to the individual who applied for it. A variance runs with the land and is transferable to any future owner of the land, but it cannot be transferred by the applicant to a different site. All variances approved by the Board of Adjustments shall be recorded at the expense of the applicant in the office of the county clerk.

404.2 Before any variance is granted, the Board must make findings as per KRS 100.243 including but not limited to the following, which shall be recorded along with any imposed conditions or restrictions in its minutes and records issued in written form to the applicant to constitute proof of the variance.

A. The requested variance arises from special circumstances which do not generally apply to land in the general vicinity, or in the same district.
B. Such special circumstances are not the result of actions of the applicant taken subsequent to the adoption of these regulations.
C. The strict application of the provisions of the regulations would deprive the applicant of a reasonable use of the land or would create an unnecessary hardship on the applicant.
D. Reasons that the variance will not adversely affect the public health, safety, and welfare, will not alter the essential character of the general vicinity, and will not cause a hazard or a nuisance to the public.

405 NONCONFORMING USES AND STRUCTURES

405.1 The lawful use of a lot or a structure, existing at the time of adoption of any land use regulations affecting it may be continued, although such does not conform to the provisions of such regulations, except as otherwise provided herein.

405.2 A nonconforming use may lapse for a period of six months without being considered abandoned. The property owner may appeal to the Board of Adjustment for an additional year prior to the end of the first year. Any lapse of a nonconforming use for a period of more than six months will result in the property being required to conform to existing land use requirements regarding appropriate uses.

405.3 A residential dwelling may be built upon a lot which was nonconforming at the time this ordinance was adopted even though such lot fails to meet the requirements for area or frontage, or both, that are generally applicable in the district. However, dimensional requirements other than those applying to area or frontage (or both) of the lots shall conform to the regulations for the district in which such lot is located. Variances must be obtained from the Board of Adjustments as described in Section 404 of this ordinance.

405.4 The Board of Adjustment shall not allow the enlargement or extension of a nonconforming use beyond the scope and area of its operation at the time the regulation which makes it nonconforming was adopted, nor permit a change from one nonconforming use to another unless the new nonconforming use is in the same or a more restrictive classification.

405.5 Should any nonconforming structure or nonconforming portion of a structure be damaged, destroyed, or demolished by any means, it may be reconstructed or repaired, but not to exceed the number of cubic feet existing in it, and not to extend or enlarge the scope and area of its operation prior to its damage, destruction, or demolition.

405.6 Administrative Review

The Board of Adjustment shall have the power to hear and decide cases where it is alleged by an applicant that there is error in any order, requirement, decision, grant, or refusal made by an administrative official in the enforcement of the land use regulations. Such appeal shall be made within thirty (30) days.

405.7 Procedure for Appeals to the Board (KRS 100.261).

Appeals to the Board of Adjustment may be taken by any person or entity, claiming to be injuriously affected or aggrieved by an official action or decision of the codes enforcement officer. Such appeal shall be taken within thirty (30) days after the appellant or his agent receives official notice of the action, by filing with said officer and the board a notice of appeal specifying the ground thereof, and giving notice of such appeal to any and all parties of record. Said officer shall forthwith transmit to the board all papers constituting the record upon which the action appealed from was taken and shall be treated as and be the respondent in such further proceedings. At the public hearing on the appeal held by the board, any interested person may appear and enter his appearance, and all shall be given an opportunity to be heard. The board will rehear an appeal only in cases where new evidence is available, or where the appealing person or entity desires a complete transcription for the court record.

405.8 Public Notice of Appeal Hearing

The board shall fix a reasonable time for hearing the appeal and give public notice in accordance with KRS Chapter 424, as well as written notice to the appellant and the Codes Administrator at least one week prior to the hearing, and shall decide it within sixty (60) days. The affected party may appear at the hearing in person or be represented by an attorney.

406 LAND USE CLASSIFICATION AND DESIGNATION

406.1 LAND USE DISTRICTS:

Land use districts are areas of land use in which more specific land use categories are identified. There are sixteen (16) regular land use districts within the City of Berea, each of which is described below with the purpose it is designed to serve.

_____**R-1** **Single Family Residential District:** The R-1 district allows for quiet, low to medium density single-family dwellings in residential neighborhoods and protect them from the encroachment of non-residential or higher density residential uses.

_____**R-1A**_**Single Family Residential District, Inner City:** The R-1A district allows for the provision of single-family dwellings on smaller lots in the older parts of the City.

_____**R-1T** **Townhouse Residential District:** The R-1T district allows for attached and detached single-family dwellings and supporting uses at a higher density than would be possible in other single-family residential districts. Zero lot line houses and patio houses are permitted in this district.

R-2 **Two Family Residential District:** The R-2 district allows for medium density single and two-family residential uses by permitting smaller lot sizes and the development of duplex dwelling units.

R-3 **Multi-Family Residential District:** The R-3 district allows for the development of high density residential uses and to meet the demand for rental dwelling units.

_____**MP** **Mobile/Manufactured Home Park/Community District:** The MP district allows for the regulation, location encouragement, stabilization, protection, and development of well-planned mobile/manufactured home parks/communities.

B-1 **Minor Business District:** The B-1 districts allows for the development of neighborhood businesses that provide convenient type goods and services on smaller tracts of land which tend to attract lower volumes of vehicular traffic, and are likely to be surrounded by medium to high density residential areas which generate pedestrian traffic.

B-2 **Major Business District:** The B-2 district allows for the development of shopping-type commercial activities which generate larger volumes of vehicular traffic. These larger tracts are readily accessible to the main traffic corridors and highly visible to vehicular traffic.

B-3 **Planned Shopping Center District:** The B-3 district encourages larger scale planned development of land for commercial purposes and the expansion of existing shopping centers.

B-4 **Interchange Business District:** The B-4 district provides for planned commercial uses at limited access highway interchange areas, and is designed for the convenience of both the traveling public and local citizens in such a way as to minimize traffic congestion and maximize safety.

P-1 **Professional District:** The P-1 district encourages the clustering of professional, research, medical, and related uses; and encourages the renovation and preservation of existing older residential structures for offices which may retain a residential function as part of the professional use . These districts should abut an arterial or collector street. The P-1 district is also designed to act as a transitional use between more intensive non-residential uses and high density residential uses in areas and will likely require a protective buffer between uses.

I-1 **Manufacturing District:** The I-1 meets the needs of smaller, free-standing manufacturers, largely of a light industrial nature, which have access to major arterial roads or railroads, and need to be screened off to protect adjacent less-intensive land uses.

I-2 **Industrial Park District:** The I-2 district accommodates a variety of manufacturers, from small-scale light industries to large-scale heavy industries, on larger tracts of land that have been pre-planned to provide the necessary infrastructure and protection from surrounding land uses.

PSF **Public and Semi-Public Facilities District:** The PSF district has been established to provide suitable sites and surroundings for institutional, public and semi-public land uses. Included among the permitted uses are parks, public schools, colleges, hospitals, police and fire facilities, swimming pools, golf courses and other related activities.

INS **Institutional Zone:** To preserve and provide for development of institutional uses with the City.
Permitted Uses:

(1) Educational activities directly related to an institution offering full-time course leading to an accredited degree. This is primarily for Berea College Campus.

(2) Proprietary-type functions which are customarily performed by private businesses or entities for a profit, not directly related to the educational purposes of this institution, shall not be permitted in the INS ZONE.

Accessory uses:
Activities incidental to the function of the institution which are managed and operated by the institution, but not including proprietary-type functions.

Development:
All proposed development within the INS District which alters the traffic patterns on existing City streets shall be presented to the planning Commission for review. No

building permit shall be issued until the development is approved by the planning Commission. (Ord. No. 11.84, 6-19-84)

A **Agricultural District:** The A districts have been established to preserve and protect the decreasing supply of agricultural land, to minimize urban-type development in rural areas, and to provide for green space in keeping with the objectives of the Comprehensive Plan.

406.2 **Overlay Districts:** These districts have been created to provide additional regulations for design standards and development within any area of the City determined to be:

(1) An area that has historical, architectural, natural, or cultural significance that is suitable for preservation or conservation; or

(2) An area that is located near a body of water, or along an established commercial corridor that has a special character related to the location that is suitable for conservation.

PUD **Planned Unit Development District*:*** The PUD district has been established to allow the mixing of uses and densities on larger tract developments and to allow higher densities than otherwise provided for in established districts See Section 409.31 for specific PUD requirements.

CSD **Chestnut Street District*:*** This district is designed to protect the architectural integrity of structures in an older historic area of the City fronting on Chestnut Street.

TD **North Broadway Tourism District*:*** This district is designed to protect the unique qualities associated with tourism in the area generally referred to as "Old Town."

PC **Protected Corridor District:** This district is designed to protect visual entrances to the City and to protect environmentally sensitive areas from inappropriate development.

The requirements of these overlay districts are covered in Section 409.

406.3 DIMENSIONAL REQUIREMENTS

RESIDENTIAL AREAS (IN SQUARE FEET)	**R-1** SINGLE FAMILY	**R-1A** INNER City	**R-1T** TOWN HOMES	**R-2** DUPLEX	**R-3** MULTI FAMILY	**MP** MOBILE HOME PARK	**PUD** PLANNED UNIT DEVELOPMENT	**A** AGRICUL-TURE
MINIMUM BUILDING SITE AREA	12,000	6,000 (PER UNIT)	1,500 (PER UNIT)	10,000	7,000*	10 ACRES 10,000**	1,900	5 ACRES
MINIMUM BUILDING LOT WIDTH AT FRONT SETBACK LINE	100	60	16	80	70	100	20	100
MINIMUM FRONT YARD SETBACK	25	25	10	25	25	25	25	50
MINIMUM SIDE YARD SETBACK	15	8	NONE	10	8	10	7.5	15
MINIMUM REAR YARD SETBACK	25	25	10	25	20	15	10	25
MAXIMUM BUILDING HEIGHT	30	30	30	30	60	20	60	60

*7,000 square feet for the first unit, 1,500 square feet for each additional unit.
**The minimum site area for a mobile home park/community is 10 acres, with a maximum of 20 acres. The minimum lot size for an individual mobile/manufactured home is 10,000 square feet. Note: Lots approved by the Planning Commission for multi-family use (R-3) prior to October 1, 2004, may be developed pursuant to density requirements of the former zoning code.
****Townhomes shall adhere tot he RIT requirements.
*****Condominiums should adhere to the zone requirements in which they are built and the governing KRS on condominiums.

NON RESIDENTIAL AREAS (IN SQ. FEET)	**B-1** MINOR BUSINESS DISTRICT	**B-2** MAJOR BUSINESS DISTRICT	**B-3** PLANNED SHOPPING DISTRICT	**B-4** INTERSTATE COMMERCIAL	**P-1** PROFESSIONAL	**I-1** MANUFAC-TURING	**I-2** INDUSTRIAL	**PSF** PUBLIC SEMI PUBLIC	**A** AGRICULTURE	**INS** INSTITUTIONAL
MINIMUM BUILDING LOT AREA	10,000	10,000	10,000	10,000	7,000	1 ACRE	50 ACRES/1 ACRE*	1 ACRE	5 ACRES	
MINIMUM BUILDING SITE WIDTH AT FRONT SETBACK LINE	50	50	50	50	70	100	100	100	200	50
MINIMUM FRONT YARD SETBACK	25	25**	25	25	25	50	50	25	50	25
MINIMUM SIDE SETBACK	0	0	25	0	10	25	25	15	25	10
MINIMUM REAR YARD SETBACK	20	20	25	15	20	50	50	25	25	20
MAXIMUM BUILDING HEIGHT	30	60	60	60	60	60	60	60	60	60

*The minimum size tract for a new industrial park is 50 acres, and the minimum building site for an industry within the park is one acre.
** In the Old Town area the minmum front yard setback shall be in accordance with the overlay guidelines and in keeping with the adjacent structures.
***The minimum rear and side yard setback for all accessory uses in all zones shall be five (5) feet; all front yard setbacks shall be as specified for the primary structure.

406.4 TYPES OF LAND USE:

406.41 TYPES OF LAND USES:

Permitted (P)	These uses are deemed to be the most appropriate uses, and are allowed in a district subject to the restrictions applicable to that district.
Conditional (C)	These are uses that are allowed in a district but which would impair the integrity and character of the district in which it is located, or in adjoining districts, unless restrictions on location, size, extent, and character of performance are imposed in addition to those imposed within this ordinance. Conditional uses require Board of Adjustment approval.
Accessory	These uses are subordinate or incidental to the principal use and are located on the same lot with the principal use.

Uses that are not indicated as a permitted or conditional use in the list of allowable land uses (excluding accessory uses), shall not be permitted.

406.5 LAND USE CLASSIFICATION:

The purpose of this section is to regulate the use of land and structures conducted within the different district, to insure that they are in keeping with the purposes of the district, and are compatible with one another. For the purpose of determining which uses shall be permitted in the different districts, the uses shall be defined and listed by categories in Section 406.52 below.

406.51: Unclassified Uses:

The Board of Adjustments may determine in which category an unclassified use shall be classified. In making their determination, the Board of Adjustments shall consider the characteristics of the site, the surrounding area, and the proposed use.

406.52 ALLOWABLE LAND USES

RESIDENTIAL	**R-1**	**R-1A**	**R-1T**	**R-2**	**R-3**	**MP/C**	**B-1**	**B-2**	**B-3**	**B-4**	**A**
Detached single family dwellings*	P	P	P	P	P	P	P	P			P
Duplex Dwellings				P	P		P	P			
Town Homes/condominiums			P		P		P	P		P	
Multi-Family Dwellings					P		P	P		P	
Bed/ Breakfast Inns	C	C	C	C	C		P	P		P	
Residential Care Facilities	P	P	P	P	P		P	P		P	
Mobile/ Manufactured Homes**						P					P
Mobile/Manufactured home parks/ Communities**						P					P

*Includes modular homes

**Mobile/Manufactured homes are allowed as permitted (P) uses in the A and MP/C districts in the City of Berea. Mobile home/manufactured parks/communities are allowed in the MP/C district within the City of Berea. For specific standards applicable to mobile/manufactured home parks/communities, refer to Appendix C.

PUBLIC/ SEMI-PUBLIC	**R-1**	**R-1A**	**R-1T**	**R-2**	**R-3**	**P-1**	**B-1**	**B-2**	**B-3**	**B-4**	**PSF**	**I-1**	**I-2**	**A**
SCHOOLS	**C**	**C**		**C**	**C**		**P**	**P**		**P**	**P**	**P**	**P**	**C**
Police/Fire Stations	**C**	**C**		**C**	**C**		**P**	**P**		**P**	**P**	**P**	**P**	**C**
Governmental offices	**C**	**C**		**C**	**C**	**C**	**P**	**P**	**P**	**P**	**P**			**C**
Parks/ Playgrounds	**P**	**P**	**P**	**P**	**P**		**P**	**P**		**P**	**P**			**C**
Swimming pools, sport/recreation facilities	**C**	**C**	**C**	**C**	**C**		**P**	**P**		**P**	**P**			**P**
Utility Facilities*														
Cellular antenna towers		SEE	SEC-	TION	412									

Libraries, Museums						**C*3**	**P**	**P**		**P**				
Churches	**C**	**C**		**C**	**C**		**P**	**P**		**P**	**P**			**P**

*Public utilities operating under state authority shall not be required to receive Planning Commission approval for the location or relocation of any of their service facilities. However, the utility in question shall provide the Planning Commission with information on the proposed change (see KRS 100.324).
*3 These would only be conditionally permitted under limited size and incidental to the primary use.

BUSINESS AND PERSONAL SERVICES	R-1	R-1 A	R-1T	R-2	R-3	P-1	B-1	B-2	B-3	B-4	PSF	I-1	I-2	A
Private recreation /sports center							C	P	P	P				
Art Galleries, exhibition halls						C		C*2		P	P			
Private golf Courses	C			C	C		C	C		P	P			C
Arenas/ Amphitheaters								C		C	P			C
Private Clubs/ Lodges							P	P		P				
Photography Art						C*2	P	P	P	P				
Barber/ Beauty Shops							P	P	P	P				
Health Spas, Weight Loss Fac.							P	P	P	P				
Pet Grooming							C	P		P				
Tanning salons							C	P		P				
Auto Repair, auto parking							C	P		P				
Auto Body Shops								C		P				
Miscellaneous Repairs							C	P		P		C		C
Laundromats					C		P	P		P				
Tailors/Seamstresses/ Upholstering							P	P		P				
Photo Developing							P	P	P	P				
Video Rental Shop							C	P	P	P				

Amusement/ Recreation							C	P		P P		
Adult (Sexually explicit) entertainment*											C	
Hotels/Motels							C	P	P	P		

*The regulations dealing with location of adult (sexually explicit) entertainment are found in Ordinance # 25-02. City of Berea

*2 These uses would be small and compatible to the neighborhood both in characteristic and scale.

Retail Trade	R-1	R-1A	R-1T	R-2	R-3	P-1	B-1	B-2	B-3	B-4	PSF	I-1	I-2	A
Food Stores (NH/Convenient)							P	P	P	P				
Food Stores Community							C	P	P	P				
General Merchandise							P	P	P	P				
Auto Dealers								P	P	P				
Service Stations							P	P	P	P				
Apparel/accessory store							P	P	P	P				
Furniture, furnishing and appliances							P	P	P	P				
Eating/drinking establishments						C*	P	P	P	P				
Drug Stores/ Pharmacies							P	P	P	P				
Office Supplies							P	P	P	P				
Toys/Sporting Goods							P	P	P	P\				
Books, Records, Tapes							P	P	P	P				
Hardware Related							P	P	P	P				
Gifts, jewelry, novelties							P	P	P	P				
Bicycles/Motorcycles							C	P	P	P				
Auto Parts/Supplies							C	P	P	P				
Package liquor/beer/ wine														
Pet Stores							C	P	P	P				
Farm equipment supply							P	P	P	P				P

Feed/Seed/Garden Supplies							C	P	P	P				P
Computers/electronics							P	P	P	P				
Miscellaneous Retail							C	C	C	C				
Manufactured Structure Sales								P		P				
Salvage Yards												C	C	
Artisan/Craft Studios	C	C		C	C	P	C	P	P	P				C
Professional Services	**R-1**	**R-1A**	**R-1T**	**R-2**	**R-3**	**P-1**	**B-1**	**B-2**	**B-3**	**B-4**	**PSF**	**I-1**	**I-2**	**A**
Architects/engineers	C			C	C	P	P	P	P	P				
Accountants	C			C	C	P	P	P	P	P				
Bank Investment Services	C			C	C	P	P	P	P	P				
Business Consultants	C			C	C	P	P	P	P	P				
Real Estate	C			C	C	P	P	P	P	P				
Tax Services	C			C	C	P	P	P	P	P				
Attorneys	C			C	C	P	P	P	P	P				
Advertising/Public Relations	C			C	C	C	P	P	P	P				
HEALTH SERVICES	**R-1**	**R-1A**	**R-1T**	**R-2**	**R-3**	**P-1**	**B-1**	**B-2**	**B-3**	**B-4**	**PSF**	**I-1**	**I-2**	**A**
Hospitals								P		P	P			
Physical Therapy						P	C	P	P	P	P			
Assisted Care Facilities						P	C	P	P	P	P			
Doctor/Dentist office	C			C	C	P	P	P	P	P	P			
Hospices						P	C	P		P	P			
Veterinary offices								P	P	P				

EDUCATIONAL/ SOCIAL SERVICES	**R-1**	**R-1A**	**R-1T**	**R-2**	**R-3**	**P-1**	**B-1**	**B-2**	**B-3**	**B-4**	**PSF**	**I-1**	**I-2**	**A**
Child Care Facilities*	C			C	C		P	P	P	P	P			
Counseling Services	C			C	C	P	C	P	P	P	P			
Social Services Organizations	C			C	C	C	C	P	P	P	P			

*ONLY INCIDENTAL USES OF FOOD, EXAMPLE-TEA HOUSES, ETC.; NO MORE THAN15% IF FACILITY FOR USE

Business/Technical Training	C			C	C		C	P	P	P	P			

* Facilities with more than 5 children must meet state requirements.

WAREHOUSING/ STORAGE	**R-1**	**R-1A**	**R-1T**	**R-2**	**R-3**	**P-1**	**B-1**	**B-2**	**B-3**	**B-4**	**PSF**	**I-1**	**I-2**	**A**
Warehouses								C		P		P	P	
Mini-Warehouses							C	P		P		C		
Moving/Storage								C		P		P	P	
Truck Freight Terminals								C	C	P		P	P	
Food Lockers								P		P				
Warehouse Distributors								C		P		P	P	

MANUFACTURING	**R-1**	**R-1A**	**R-1T**	**R-2**	**R-3**	**P-1**	**B-1**	**B-2**	**B-3**	**B-4**	**PSF**	**I-1**	**I-2**	**A**
Food and Related	**C***	**C***	**C***	**C***	**C***							C	P	
Apparel/finished goods	**C***	**C***	**C***	**C***	**C***							C	P	
Lumber/Wood Products	**C***	**C***	**C***	**C***	**C***							C	P	
Paper/Related	**C***	**C***	**C***	**C***	**C***							C	P	
Printing /Publishing	**C***	**C***	**C***	**C***	**C***							C	P	
Chemicals/ Petroleum													C	
Rubber/Plastics													C	
Leather Products	**C***	**C***	**C***	**C***	**C***								C	
Stone, Clay, Concrete, Glass	**C***	**C***	**C***	**C***	**C***							C	C	
Primary Metals	**C***	**C***	**C***	**C***	**C***							C	C	
Industrial Equipment												C	P	
Transportation Equipment												C	P	

Electronics												C	P	

***These particular types of uses are only allowed in single family dwellings and must meet all requirements for a home occupation as set forth in section 408.**

AGRICULTURE*	**A**
Crop Production	**P**
Pastures	**P**
Timber	**P**
Orchard fruits/Vineyards	**P**
Horticulture	**P**
Livestock Production**	**P**
Poultry Production**	**P**
Farm Machinery Repair/Servicing	**P**
Aquaculture	**P**

*See the definition of agricultural uses in Article V. If the principal use of a five (5) acre or larger lot is used for a single-family residence it is not considered as an agricultural use.
** High density livestock activity such as cattle/hog and poultry feedlots and similar intensive feeding operations are prohibited.

406.6 USES PROHIBITED IN ALL DISTRICTS

The following shall be prohibited uses in all districts:

1.) Stockyards;
2.) Mobile homes, unless in an approved mobile home park; or Zone Classification.
3.) Recreational Vehicles within the City limits used for habitation, over seven (7) days, except in a conditionally approved commercial location.
4.) Junkyards. The administrative official shall ensure that all junkyards existing as nonconforming uses maintain valid permits to operate issued by the Kentucky Department of Transportation, as required by KRS 177.905 thru177.950, and shall ensure that all screening required by the Department of Transportation is maintained as long as the junkyard remains in operation.
5.) No manufacturing or other process shall be carried on that is objectionable by reason of odor, dust, smoke, gas fumes, noise, vibration, refuse matter or water- carried waste.

6.) Truck Service Centers. *Truck Service Center means a business, facility, or development which primarily provides services to commercial vehicles which are not owned by the facility or development, including fuel, food, or entertainment for the operators or vehicles designed for the transportation of non-human cargo, including but not limited to truck stops, truck washes, truck service facility, truck refueling facilities, and other similar uses; provided however, not including a business facility or development which only provides repair or maintenance services to such vehicles without providing fuel, food, or entertainment.*

407 THE OFFICIAL ZONING MAP

For the purpose of administering this chapter, the City of Berea is divided into land use areas and districts, the boundaries of which are shown on the Official Zoning Map.

407.1 The Official Zoning Map for the City of Berea shall be identified by the title "Official Zoning Map of Berea, Kentucky" and shall bear the signature of the Mayor attested by the City Clerk and bearing the seal of the City following the statement "This is to certify that this map is the Official Zoning Map of Berea, Kentucky, as adopted by Ordinance **#14-89** by the City Council on July 25, 1989.

407.2 If in accordance with the provisions of this chapter and KRS Chapter 100, amendments are made in the district or overlay district boundaries or other matters portrayed on the Official Zoning Map of the City of Berea, such amendments shall be made to the Official Zoning Map promptly after the amendment has been approved by the appropriate governing body with an entry on the Official Zoning Map as follows:
"By official action of the City Council, this map is amended as authorized by the Ordinance Number and signed by the Mayor and attested by the City Clerk.

407.3 No changes of any nature shall be made to the Official Zoning Map or matter shown thereon except in conformity with the procedures set forth in this chapter and in KRS Chapter 100. Any unauthorized change of whatever kind by any person or persons shall be considered a violation of this chapter and punishable as provided herein.

407.4 Regardless of the existence of purported copies of the Official Zoning Map which may from time to time be made or published, the Official Zoning Map which shall be located in the office of the appropriate Administrative Official shall be the final authority as to the current land use classification of land and water areas, buildings, and other structures in the City or county.

407.5 In the event the Official Zoning Map becomes damaged, destroyed, lost, or difficult to interpret because of the nature or number of changes and additions,
or due to deterioration with the passage of time, the City of Berea may adopt a new

Official Zoning Map which shall supersede the prior map, but no such correction shall have the effect of amending the original Official Zoning Map, or subsequent amendment thereof. The new Official Zoning Map shall be identified by the same signature, seal, and wording as provided in the original map.

407.6 INTERPRETATION OF BOUNDARIES

Where uncertainty exists with respect to the boundaries of any of the land use areas or districts as shown on the Official Zoning Map, the following rules shall apply:

1. Boundaries indicated as approximately following the center lines of streets, highways, or alleys shall be construed to follow such center lines.
2. Boundaries indicated as approximately following platted lot lies or property lines shall be construed as following such lot lines or property lines.
3. Boundaries indicated as approximately following City limits shall be construed as following such City limits.
4. Boundaries indicated as following railroad lines shall be construed to be midway between the main tracks.
5. Boundaries indicated as following shore lines shall be construed to follow such shore lines, and in the event of change in the shore line, shall be construed as moving with the actual shore line; boundaries indicated as approximately following the centerline of streams, rivers, creeks, or other natural drainage courses shall be construed to follow such center lines.
6. Boundaries indicated as parallel to or extensions of features indicated in divisions 1 through 5 above, shall so be construed.
7. Where physical or geographical features existing on the ground are at variance with those shown on the Official Zoning Map, or in other circumstances not covered by divisions 1 through 5 above, the Planning Commission shall interpret the district or overlay district boundaries.

408 SUPPLEMENTARY USE REGULATIONS

A. Home Occupations shall be permitted as a conditional use in all residential land use districts, provided they comply with all of the following:

1. A home occupation permit shall be obtained from the Administrative Official who shall inspect the site where the home occupation is to be located to insure compliance with this section of the ordinance. If the terms of this section are being violated, the Home Occupation Permit may be revoked.
2. Allowable uses include but are not limited to professional offices,

workshops, studios, and personal services. Retail sales, or processing of any product shall be allowed only under conditions established by the Board of Adjustments.

3. The use shall be conducted entirely within the principal dwelling or garage. In agricultural districts, the use may be conducted in an accessory structure.
4. The use shall not occupy more than 25% of the gross floor area of the structure.
5. There shall be no evidence of the use visible from the exterior of the dwelling except for one non-illuminated sign of not more than eight square feet in area.
6. There shall be no noise, odors, fumes, dust, or vibrations emitted from the building.
7. There shall not be more than one employee who is not a family member residing at that location.
8. Two off-street parking spaces may be required for customers and clients in addition to off-street parking for the residents.

B. Accessory Uses and Structures:

1 Accessory uses or structures are subordinate to the principal use of the land or building, are located on the same lot, and serve a purpose that is customarily incidental to the principal land use or principal building use.

2. Residential accessory structures shall be permitted in all residential and agricultural districts (except where prohibited by private land use restrictions/covenants), and include but are not limited to the following; detached garages, storage sheds, carports, patios, picnic shelters, playhouses, tree-houses, satellite dishes, swimming pools, greenhouses, swing-sets/slides, radio/television antennae, heating/air conditioner units, and basketball goals.

In-ground swimming pools shall be completely enclosed by a fence or wall at least four feet in height. The walls of an above ground swimming pool may be considered part of the required fence height. All gates or openings in the fence shall be equipped with self-closing and self-latching devices. Pools shall not be located beneath or within five (5) feet of an overhead electric line.

All ladders shall be removed while the pool is not in use; and decks, steps, or other means of access to an above ground pool shall be secured within a fence or be equipped with self-closing and self-latching devices.

Residential accessory structures may be located in a side yard or rear yard provided they comply with all setback requirements and do not occupy more than 25% of the yard area.

3. Non-residential accessory structures shall be permitted in all non-residential districts and include but are not limited to the following; storage buildings, storage silos, heating and mechanical equipment, conveyor equipment, trash dumpsters, compactors, incinerators, or electric substations.

   Non-residential accessory structures shall be permitted in all non-residential districts provided they comply with all the district requirements.

C Roadside Sales. Included in roadside sales are temporary stands and temporary places of business for sales of locally-grown fruit, flowers and vegetables, crafts, seasonal items such as Christmas trees, Memorial Day flowers, fireworks, and similar seasonal merchandise. Roadside sales shall be permitted in business districts provided:

1 A roadside sales permit shall be obtained from the Administrative Official. The Administrative Official shall approve the site, and may issue a three day or 21 day permit; however, not more than three permits may be issued to the same vendor at the same location during any calendar year.
2. Temporary structure allowed may include booths, tents, trucks, or tables, but no campers or manufactured structures shall be permitted.
3. One sign not more than 12 feet in area may be allowed.
4. No merchandise or signs shall be displayed on any public way.
5. Adequate off-street parking shall be provided for customers. If located on a commercial establishment lot, the sale area shall not occupy any of the required off-street parking space.

D. Yard Sale Permits are sold in the Finance Office and responsibility of the office.

E. Fences, Walls, and Hedges. Fences, walls, and hedges serve to enclose similar land uses and to separate different land uses. They also serve as buffers that screen activities that might be inharmonious. There are two types of these devices; 1) those that do not impede visibility by more than twenty (20) percent, and 2) those that do impede visibility by more than twenty (20) percent. Type 1) includes but is not limited to chain link, woven wire, split rail, and other similar fences, and low density vegetative screens. Type 2) includes but is not limited to masonry walls, board and stockade fences, chain link

fences with inserts, and dense hedges or vegetative screens. These devices shall be permitted in the rear or side yard in any district, unless subdivision covenants deem otherwise. Chain
link fences and retaining walls shall be allowed in front yards provided they are not more than four (4) feet in height and don't impede visibility.

F. Barbed wire, electrified fences or other similar protection devices shall not be permitted in any residential district or adjacent to any residential use in agricultural districts.

G. Storage of recreational vehicles. Storage of recreational vehicles including campers, boats and trailers, motor homes, off-road vehicles, and other non-licensed vehicles may be stored in any district, provided:

1. Recreational vehicles may be stored on the driveway on the side or in the rear of the dwelling, but only in the front yard when it has been determined that there is not sufficient space in the side or rear yard. In no case shall such parking cause visibility problems.
2. Not more than one recreational vehicle shall be stored on any lot, nor shall their storage impede visibility of vehicular or pedestrian traffic.
3. Recreational vehicles may not be stored on any public way for more than twenty four (24) hours.
4. Only operable, functional recreational vehicles possessing current vehicle registration, when registration is required, are permitted.
5. Only recreational vehicles registered to the occupant may be stored on the occupant's lot.

H. Outdoor uses. Unless specifically permitted elsewhere in this chapter, all usages, including storage or displays thereof, shall be conducted entirely within completely enclosed structures. The following shall be excepted from this requirement:

1. Uses located within a B-2, B-4 I-1, or I-2 district.
2. Agricultural uses within any district.
3. Storage or display of automobiles, trucks, boats, or recreational vehicles.
4. Fuel pumps for permitted service stations.
5. Displays or production of trees, shrubs, vegetable plants and flowers.
6. Trash dumpsters, compactors, or receptacles. These uses shall be located in the rear yard and screened from public view.

I. Separate building site required. Unless specifically permitted elsewhere in this chapter, a separate building site shall be provided for each individual building or use, except for permitted accessory buildings or accessory uses.

J. Visibility at intersections. On corner building sites, no structure, fence, or planting which creates a material impediment to visibility shall be permitted

within the triangular area formed by the intersecting street lines and a straight line connecting such street lines at points 30 feet from their point of intersection.

K. Yard requirements at district boundaries. Whenever two different districts adjoin, the minimum width and depth requirements of both adjoining front, side, and rear yards shall be the more restrictive of the two districts.

L. Projecting architectural features. Every part of a required yard shall be open and unobstructed from the ground to the sky except for permitted accessory structures and for the ordinary projection of sills, belt course, cornices, buttresses, eaves, and similar architectural features, provided that such projections shall not extend more than five feet into any required yard. Open fire escapes may extend into any required yard not more than 3 ½ feet.

M. Landscaping. In the City of Berea, a landscape plan shall be submitted with the development plan or the building permit application for review and approval by the Planning Commission.

1) Purpose. The purpose of these landscape requirements is to enhance the aesthetic qualities of development and to minimize the friction that might occur between different land uses. In addition, the planting of trees, shrubs, and ground cover, and use of fences, walls, and earthen mounds help to retard erosion, channel vehicular and pedestrian circulation, protect surrounding property values, reduce the effects of air, odor, visual, and noise pollution, and reduce glare from outdoor lighting.
2) Developer's Responsibility. The landscape buffer set forth in this section shall be provided as a condition of development by the owner or developer of the property in question. An owner securing a change in land use classification which creates a different situation shall be deemed the one responsible for creating the different situation and shall provide the buffer areas as a condition of such land use change. If the different situation already exists or is created by a general land use change not sponsored by the property owner, the buffer easement shall be provided as a condition of the approval of any subdivision of the affected land. When a subdivision or other development is being established in an area that is contiguous to a farm, the developer of the subdivision shall be responsible for providing a fence to separate the new development.
3) Compliance. The Codes Administrator shall be responsible for insuring compliance with this section of the ordinance as part of any subdivision plat or development plan review. The Codes Administrator shall inspect the premises prior to the issuance of a certificate of occupancy to insure that the landscape buffer is in place. If, due to seasonal variance, planting is not practical at the time required for issuance of the certificate of occupancy, the property will be inspected at such time as the planting is

actually done.

4) Exceptions. In a situation where by reason of exceptional shape, topographic, dimensional, or other special conditions, enforcement of this section would create an undue hardship on the applicant, the applicant may request a variance or waiver of such requirements.

5) Relationship to Yard Requirements. The landscape buffer areas set forth in this section shall be included in the minimum yard requirements of the appropriate land use district. If the buffer area is greater than the yard requirement, the yard requirement shall be extended to accommodate the buffer.

6) Buffer Area Conflicts. Where landscape buffers are required in the same location as utility easements, the two may be combined providing that the total width and screening requirements are met and it is not in violation of any required utility easements.

7) Provision of Planting Materials and Barriers. Such trees, shrubs, ground covers, and barriers as required shall be provided by the owner or developer and considered as any other site improvement. The planning Commission may require the posting of a surety bond to cover the cost of landscape improvements.

8) Inclusion on Subdivision Plats and Development Plans. Areas to be set aside for landscape buffer areas shall be shown on subdivision plats and development plans as applicable. In addition, each lot shall have one shade tree planted for each fifty (50) feet of street frontage.
Trees shall have a minimum trunk size of two inches in diameter unless otherwise specified, shall be nursery grown, and adapted to the local area.

9) Maintenance of buffer strip. Landscape buffers shall be maintained by the property owner in a neat, clean, and sanitary manner.

N. Landscape Buffer Requirements: The landscape buffers described below shall apply to all common boundaries between different land uses. The developer shall plant trees and either shrubs or construct a wall/fence as indicated. Ground cover (grasses, mulch, etc.) shall be planted as well.

ADJOINING USES		BUFFER WIDTH	TREES	SHRUBS OR BARRIERS
Single and Two Family Residential		10 feet	1 small or medium tree @ 40 foot intervals	6 foot continuous hedge or 4 foot wall/fence
Single or Two-family	and Multi-family or Mobile Home	10 feet	1 small or medium tree @ 40 foot intervals	6 foot continuous hedge or 4 foot wall/fence
Multi-family and	Mobile Home	10 feet	1 medium or large tree @ 40 foot intervals	continuous or at 10 foot intervals with wall/fence
Single or	Commercial or	15 feet	1 medium or large tree	6 foot continuous hedge or

Two-family and Industrial		@ 40 foot intervals	intermittent planting w/wall, or 6 foot wall/fence
Multi-family or Commercial or Mobile Home and Industrial	10 feet	1 medium or large tree @ 40 foot intervals	6 foot continuous hedge or intermittent planting w/wall, or 6 foot wall/fence
All residential and Freeways/Hwys and railroads	20 feet	1 medium or large tree @ 30 foot intervals	6 foot continuous hedge or 6 foot wall/fence
Commercial and Industrial	10 feet	1 medium or large tree @ 40 foot intervals	4 foot continuous hedge or at 10 foot intervals w/wall, or 4 foot wall/fence
Commercial/ Industrial and Freeways/ Highways	10 feet 10feet	1 medium or large tree @ 30 foot intervals	4 foot continuous hedge or 4 foot wall/fence
All uses and Utility stations, landfills, salvage yards, sewer plants	15 feet	1 medium or large tree @ 30 foot intervals	6 foot continuous hedge or 6 foot wall/fence

O. Open Space Requirements

It is desirable that a portion of the land within multi-family residential areas be set aside as green or open space. This land is designed and intended for the common use and enjoyment of the residents and their guests.

1) Land designated as open space shall not be occupied by any structure or impervious surfaces, with the exception of recreational facilities such as picnic tables, play equipment for youngsters, and similar facilities as approved by the Planning Commission.
2) Land within R-1T, R-3, and PUD developments shall be set aside for open space as follows:
   a) R-1T and PUD developments shall set aside a minimum of twenty (20) percent of the total development area as useable open space.
   b) R-3 developments shall set aside a minimum of ten (10) percent of the total development area as useable open space.

P. "Big Box" Development

1) Purpose. Berea has previously had large-scale commercial buildings (hereafter referred to as Big Box Development) that were designed to accommodate only the original tenants, and when vacated, were rendered unsuitable in both size and layout for most potential subsequent tenants, and remained vacant or underutilized. Accordingly, the City of Berea has established these guidelines to avoid the negative consequences of such

development in the future.

2) Application. These guidelines shall apply to all projects for retail establishments of more than 40,000 square feet, or expansion of existing buildings or developments which would result in a building of more than 40,000 square feet, and shall be incorporated in the proposed development plan.

3) Design Guidelines. For specific Big Box design criteria (see Berea City Code 81.309).

409 OVERLAY DISTRICTS

409.1 Purpose

In accordance with K.R.S. 82.650 - 82.670, and Section 407.2 of this ordinance, the City of Berea has established Overlay Districts to provide additional regulations for design standards and development within any area of the City determined to be:

1. An area that has historical, architectural, natural, or cultural significance that is suitable for preservation or conservation.
2. An area that is located near a body of water, or along an established commercial corridor that has a special character related to the location that is suitable for conservation.

409.2 Provisions for Establishment/Administration of an Overlay District: (KRS 82.650-670)

1. An accurate description of the boundaries of the district.
2. A description of the historical, architectural, cultural, aesthetic, natural, or other distinctive characteristics of the district that are to be preserved or conserved.
3. A delegation of responsibility for the administration of overlay regulations to an appropriate entity of City government pursuant to KRS 82.670.
4. The standards, guidelines, or criteria proposed to govern development within the district to preserve, conserve, or protect the historical, architectural, cultural, aesthetic, or other distinctive characteristics of the district. These standards, guidelines, or criteria may be set out descriptively or by illustrations, and may incorporate by reference established architectural standards or guidelines.
5. Upon the effective date of the establishment of an overlay district, no person shall begin any major structural change or any ordinary repairs to any building or structure or change or create any surface parking lot, or clear a parcel or lot of trees or other major vegetation, or change the appearance to signage within an overlay district until the City has issued a permit, without cost, certifying that the person has complied with the provisions of these regulations. This prohibition shall not apply to emergency repairs that need to be made to a building or structure within an overlay district.
6. Development plans are required for all proposed development in overlay districts, in accordance with Section 401.3.
7. The body delegated to administer this section of the ordinance shall follow the

procedure described in Section 401.2 in establishing an overlay district.

8. Overlay district regulations shall not conflict with the land use management regulations for the district and shall not permit uses prohibited by underlying district regulations or prohibit uses permitted by underlying district regulations.

409.3 Procedures

The establishment of an Overlay District shall follow the procedure for amending the Official Zoning Map as described in Section 401.2. The Planning Commission may require a development plan (Section 401.3) as part of the application. In addition, any subdivision of the development site is subject to the subdivision provisions of this ordinance (Article V). A building permit and certificate of occupancy may be required for each building as deemed appropriate. An Overlay District shall be designated on the Official Zoning Map by the appropriate abbreviation.

409.31 Planned Unit Development District (PUD)

Objectives

The Planned Unit Development District has been established to allow flexibility in residential design and development. The primary use of the district is residential, but there is an allowance for neighborhood commercial activity. The objectives of a PUD are:

1. To provide a maximum of living environments by allowing a variety of housing and building types and permitting an increased density (if applicable), reductions in lot dimensions, yards, and area requirements.
2. To provide a more useful pattern of open space and recreation areas, and if permitted as part of the project, more convenience in the location of selected commercial uses and services.
3. To allow a development pattern which preserves and utilizes natural topographic features, scenic vistas, landscaping, and prevents the disruption of natural drainage patterns.
4. To encourage a more efficient use of land than generally is achieved through conventional development, resulting in substantial savings through more efficient use of space.
5. To create a development pattern in harmony with land use density, transportation facilities, and community facilities of the Comprehensive Plan.

Higher densities may be allowed in a PUD provided that the developer can demonstrate that any increment of public cost clearly attributable to increased densities will be compensated for by the private amenities and public benefits to be achieved by the development plan.

Provisions

Whenever there is a conflict or difference between the provisions of this section of the ordinance and other sections of the ordinance, the provisions of this section shall prevail for PUDs.

1. Compatible residential, neighborhood commercial (B-1), public, and semi-public uses may be combined, provided the proposed location of the commercial activities will not adversely affect adjacent property, or jeopardize the health, safety, and general welfare of the public. The Planning Commission may place limits on the amount of commercial development, and shall not allow the development of commercial areas until completion of the residential areas.

2. The minimum site area for development is five (5) acres, and the minimum lot area is 1,900 square feet, with a minimum lot width of twenty (20) feet, and setback lines of twenty-five (25) feet in the front, and twenty (20) feet in the rear.

3. Spacing between the exterior side walls of buildings shall be at least fifteen (15) feet.

4. Clustering of dwellings is encouraged. There shall not be more than eight (8) individual units in a contiguous cluster.

5. Notwithstanding the other provisions of this ordinance, every lot abutting the perimeter of the PUD site shall maintain all yard requirements specified by the applicable land use district.

6. A minimum of twenty (20) percent of the total development site shall be reserved for common open space and recreational facilities for the residents of the development.

7. The project land shall be owned, leased, or controlled either by a single person or entity, either public or private.

8. Underground utilities are required (if practical). If this requirement cannot be met, a detailed explanation must be submitted and approved.

409.32 The Chestnut Street Residential District (CSD)

a. The Chestnut Street Residential District includes all property located on Chestnut Street as shown in the Chestnut Street Overlay District Map (see Appendix O).

b. The distinctive characteristics of the district that are to be protected and preserved are described in the Chestnut Street Design Overlay District Design Guidelines, and cover demolition, new construction, additions, garages/ outbuildings, and site features (see Appendix O for specific requirements).

c. The responsibility for administering the overlay district is vested in the Planning Commission, which shall be assisted by a Board of Design Review appointed by the Mayor of Berea with concurrence of the City Council .

d. The applicant for major structural change or ordinary repair (as deemed appropriate) shall make application to the Codes Administrator, and such application shall be reviewed as by the Board of Design Review in a public hearing in accordance with the provisions of Section 401 2, C.

e. The Board of Design Review shall review any proposed changes related to demolition, new construction, additions, garages and outbuildings, and site features, submitted by an applicant. Upon completion of the review, and approval of the request, the Department of Codes and Planning shall issue a permit (without cost) certifying that the applicant has complied with the provisions of the overlay district. The applicant may then proceed with completion of the designated changes. If the request is denied, the applicant may resubmit an application, no sooner than one (1) year from the date of the action taken by the Commission.

409.33 North Broadway Tourism District (TD)*:* This district is designed to protect the unique qualities associated with tourism in the area generally referred to as "Old Town."

409.34 Protected Corridor District (PC): This district is designed to protect visual entrances to the City and to protect environmentally sensitive areas from inappropriate development.

410 PARKING

410.1 PURPOSE

The purpose of this section is to establish requirements regulating the quantity and design of off-street parking areas, to relieve traffic congestion in the public ways, and to minimize potential detrimental effects of off-street parking on adjacent properties.

410.2 GENERAL REQUIREMENTS

A. The provisions of this section are the minimum permissible off-street parking requirements and shall apply to all applicable districts.

B. No building or structure shall be constructed, enlarged, or altered, or its use changed or enlarged, unless off-street parking has been provided in conjunction with this section.

C. Each application for a building permit shall include sufficient information or plans to enable the Codes Administrator to determine whether or nor the requirements of this section have been met, to include:

1. Location and dimensions of all parking spaces, driveways, aisles, and pedestrian walkways.
2. Provisions for pedestrian and vehicular circulation, lighting, and drainage.

3. Number of anticipated employees, company-owned vehicles, building rooms, offices, square footage, or other related information for determining the number of spaces required.
4. Landscaping plan.

D. All required off-street parking shall be located on the same building site, or on a site adjacent to the land use served.

E. Collective off-street parking may be provided; however, the required number of spaces provided shall not be less than would otherwise be required individually.

F. Upon written application and written certification of approval by the owner, adjacent off- street parking spaces may be shared if the hours of usage for the uses in question do not coincide.

410.3 OFF-STREET PARKING AND DESIGN STANDARDS:

410.31 Access

A. Access to off-street parking areas within the City of Berea. shall be as follows:

1. The location, width, and number of entrance and exit driveways serving public accessory parking facilities, drive-in businesses, fee parking lots, and public parking lots, shall be planned in such a manner as not to interfere with either the use of adjacent property or the flow of traffic on the streets to which they connect and in accordance to the Access Management Ordinance. Intersections between off street parking areas shall be provided where feasible.
2. Location of curb cuts shall be approved by the City Street Superintendent.
3. Parking areas of up to twenty (20) spaces shall have at least one (1) two-lane driveway located at least fifty (50) feet from any street intersection measured along the curb.
4. Parking areas of more than twenty (20) spaces shall have two (2) two-lane driveways located not less than fifty (50) feet from the right-of-way line of the nearest intersecting street.
5. Entrance or exit driveways shall have travel lanes of a minimum width of ten (10) feet and a maximum width of twelve (12) feet for each lane.
6. The angle of intersection between the driveway and the street shall be between seventy (70) and ninety (90) degrees. The radius of the driveway apron shall be at least twenty (20) feet, or as required by the Codes Administrator for the use proposed.
7. All parking spaces, except those required for single family household detached dwellings, shall have access to a public street or alley in such a manner that any vehicle leaving or entering the parking area from or into a public street or alley shall be traveling in a forward motion.
8. Properties located in a residential district shall not be utilized to provide parking for or access to non-residential districts. However, the Board of Adjustments

may authorize a conditional use permit to grant the development of a parking area in a residential district, provided that such parking area is no farther than two-hundred (200) feet from the use which it is serving.

9. On any residential property where the garage access is located in the side or rear yard of the property, there shall be a minimum ten (10) foot driveway accessing the garage.
10. Parking of vehicles in any parking lot shall be with marked stalls only.

B. Setbacks

The location of off-street parking facilities and access drives for more than five (5) vehicles, excluding single and two household dwellings, may be located in the required yards unless otherwise specified elsewhere in this ordinance.

C. Landscaping and Screening

In addition to the setback requirements specified in this chapter for off-street parking for more than five (5) vehicles, screening shall be provided on each side of the parking area that abuts any residential district or use.

D. Paving and Drainage

Any off-street parking area for more than five (5) vehicles and its access drives shall be graded and drained so that the natural flow of surface water shall not be channeled or concentrated onto adjacent property by means other than a designated drainage course. Parking areas and access driveways shall be improved with an asphaltic or concrete surface in accordance with provisions of the Berea City Code 81.308 (F). Pavers may also be used if approved by the Planning Commission. Pavers shall include durable materials suitable for parking such as cobblestones, brick, concrete formed blocks, or cut stone, provided the materials are specifically designed and installed for vehicular loads.

E. Barriers

Whenever a parking lot extends to a property line, fencing, wheel stops, concrete curbs or other suitable barriers shall be provided in order to prevent any part of a parked vehicle from extending beyond the property line and from destroying the screening materials, or from interfering with pedestrian use of sidewalks.

F. Visibility

Access of driveways for parking areas shall be located in such a way that any vehicle entering or leaving such parking area shall be clearly visible by any pedestrian or motorist approaching the access or driveway from a public street, private street, or alley.

G. Marking

All parking areas for more than five (5) vehicles shall be marked with paintlines or in some other manner approved by the City and shall be maintained in a clearly visible condition.

H. Maintenance

Any owner of property used for parking areas shall maintain such areas in good condition.

I. Signage

Where necessary, entrances, exits, and the intended circulation pattern shall be clearly marked in the parking area. Signs may also be permitted which indicate the operator of the parking facility. Stop signs shall be installed where parking areas exit to a public way.

J. Lighting

Lighting shall be in conformance with Section 413 of this ordinance.

K. Stacking Spaces for Drive Through Businesses

Businesses utilizing drive through windows or those that offer drive through facilities shall provide sufficient stacking space for five (5) vehicles. For the purposes of this article one stacking space shall be construed as a minimum of nine (9) feet in width and nineteen (19) feet in length. Such stacking space shall begin at the point of business transaction and shall accommodate five (5) vehicles without obstruction to through vehicular traffic or parked vehicle areas. The point of business transaction shall include teller windows, fast food order location, a gasoline fuel pump, car wash bay, or the drive through automated teller window.

L. Parking of Commercial Vehicles

Commercial vehicles with or without signage which are over nine (9) feet in width or nineteen (19) feet in length, shall not be parked in a parking area. Such vehicles shall be parked or stored in the required off-street loading spaces.

M. Parking on Unimproved Surfaces Prohibited

No motor vehicle shall be parked or stored on any area not improved in accordance

with Section D above. Both the owner of any such improperly parked or stored vehicle and the owner or occupant of the property on which the vehicle is parked or stored shall be considered in violation of this section.

410.32 Determination of Required Spaces

In computing the number of parking spaces required by this ordinance, the following shall apply:

A. Where floor area is designated as the standard for determining parking space requirements, floor area shall be the sum of the net Leasable horizontal area of all floors of a non-residential building. Those areas used for storage or otherwise not occupied by people may be excluded from the floor area calculation if such exclusion is approved by the Planning Commission.

B. Where seating capaCity is designated as the standard for determining parking space requirements, the capaCity shall mean the number of seating units as determined in the proposed plan.

C. Where the required parking is determined by the number of employees, the maximum number of employees on duty on the premises at one (1) time, or any two (2) successive

shifts, whichever is greater, shall be used.

D. Fractional number shall be increased to the next highest whole number.

E. When the building floor area is designated as the standard for determining parking space requirements and that number is less than the minimum standard, at least one (1) parking space shall be provided on the premises.

410.33 Parking Space Dimensions

Each off-street parking space shall have the following dimensions and shall be of useable shape and conditions:

A	B	C	D	E	F
Parking Angle	Stall Width	Length of Stall	Aisle Width	Curb to Curb Width (Single Bay)	Bay Width (Center to Center)
0 degrees	10 feet	21 feet	24 feet	42 feet	42 feet
45 degrees	10 feet	20 feet	13 feet	53 feet	46 feet
			24 feet (two-way)		
60 degrees	10 feet	21 feet	18 feet	60 feet	55 feet
			24 feet (two-way)		
90 degrees	10 feet	19 feet	24 feet	62 feet	62 feet

PARKING AREA DESIGN STANDARDS

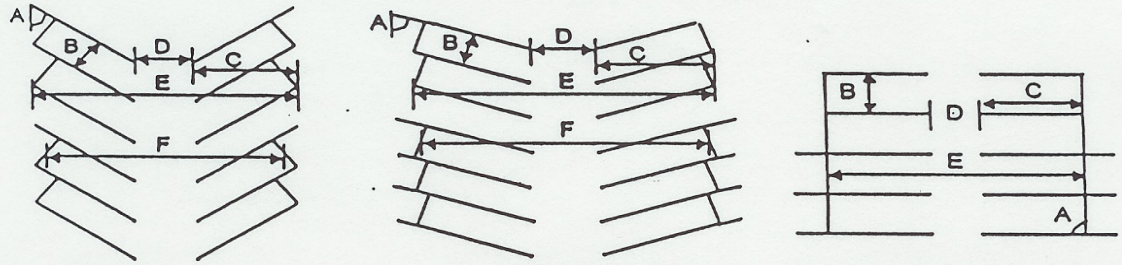

410.4 Parking Space Requirements

The number of pa

rking spaces required for selected land use activities along with the criteria for determining the spaces are indicated below. If a particular use is not included in the list, the Codes Administrator will determine the requirements based on the land use most closely related to the one in question.

Uses	Space Requirements
Residential	
One and Two Family	2 per dwelling unit
Multi-family	2 per dwelling unit
Group quarters	3 spaces for every 5 beds
Homes for senior citizens	1 per 2 beds
Commercial	
Automobile repair	2 spaces per service bay (excluding the bay) + one space per employee, and 1 space per employer vehicle
Automobile sales	1 space per 400 sq. ft. of net floor area of sales, shop and garage, + 1 space per employee
Banks, financial institutions	1 space per 200 sq. ft. of net floor area + stacking spaces for drive through
Car wash	5 stacking spaces per lane for automatic: 4 stacking spaces+ 2 drying spaces per stall
Convenience store	1 space per 200 sq. ft. of net floor area, + 1 space per island, + 1 space per employee
Day care center, child/ Pre-school	1 space per employee, + 1 space for each 6 children,+ 1 space per facility vehicle
Service stations	1 per pump + 1 per bay + 1 per 200 sq. ft. gross floor area for offices /retail activities
Funeral homes	1 per 100 sq. ft. gross floor area
Grocery stores	1 space per 175 sq. ft. of net sales floor area
Health/fitness facility	1 space per 200 sq. ft. of net floor area
Hotels, motels	1 per sleeping room + 1 per employee
Mini-storage facility	3 spaces + 1 per 100 storage units
Offices (low)*	5 spaces for first 1,000 sq. ft., + 1 space for each 250 sq. ft. of net floor area
Offices, (high)*	6 spaces + 1 space per 200 sq. ft. in excess of 1,000 sq. ft.
Retail, sales/service (high)*	1 per 200 sq. ft. gross sales floor area
Retail, sales/service (low)	1 per 400 sq. ft. gross floor area
Restaurants, sit-down	1 per 50 sq. ft. gross floor area
Restaurants with drive-thru	1 space per 3 seats
* Where the specific office or retail use is not known, the high traffic volume requirements shall apply.	
Restaurants, drive through	5 stacking spaces per lane
Entertainment/Recreation	
Bowling alley	4 per lane + 1 per 100 sq. ft. gross floor area for other uses
Theaters	1 space per 3 seats
Sports arena, stadiums,	1 space per 3 seats
Parks, recreation areas	4 spaces per acre
Golf courses	4 per golf hole + 1 per 250 sq. ft. gross floor area of pro-shop, concession, etc.
Public/Semi-public	

Libraries, museums	1 per 400 sq. ft. gross floor area
Elementary/Middle Schools	One space for each 3 auditorium seats, or 1 space per classroom (whichever is greater)
High school	1 per employee + 1 per 6 students +12 visitor spaces
Vocational/Technical	1 per employee + 1 per 2 students
College/university	1 per employee + 1 per 4 students
Government building	1 per 250 sq. ft. + 1 per 4 patrons(whichever is greater)
Police/fire stations	1 per employee on maximum shift + 1 per facility vehicle + 1 per 250 sq. ft. of net floor area
Civic clubs, related activities	1 per 50 sq. ft. of net floor area
Churches/places of worship	1 per 4 seats in sanctuary
Hospitals/clinics	2 spaces per bed or 1 space per 150 sq. ft. net floor area, whichever is greater.
Manufacturing	1 per 1 ½ employees on maximum shift + 1 space per facility vehicle and 5 spaces for visitors.

410.5 Loading and Unloading Areas:

Whenever the normal operation of any development requires that goods, merchandise, or equipment be routinely delivered to or shipped from that development, a sufficient off-street loading and unloading area must be provided in accordance with this section to accommodate the delivery or shipment operations in a safe and convenient manner. The loading and unloading area must be of a sufficient size to accommodate the number and types of vehicles that are likely to use this area, given the nature of the development in question. The following table indicates the number and size of spaces that, presumptively, satisfy the standard set forth in this section. However, the Codes Administrator may require more or less area if reasonably necessary to satisfy the foregoing standard.

Gross Leasable Area of Building	Number of Spaces*
1,000 - 19,999	1
20,000 - 79,999	2
80,000 - 127,999	3
128,000- 191,000	4
192,000- 255,999	5
256,000- 319,999	6

Plus one (1) space for each additional 72,000 square feet or fraction thereof. *Minimum dimensions of 12 feet x 55 feet and overhead clearance of 14 feet from street grade required.

Loading and unloading areas shall be located in the rear of the structure and designed so

that the vehicles using them can; 1) maneuver safely and conveniently to and from a public right-of-way, and 2) complete the loading and unloading operations without obstructing or interfering with any public right-of-way or any parking area.

No area allocated to loading and unloading may be used to satisfy other area requirements for off-street parking.

411 SIGN REGULATIONS

411.1 PURPOSE

These standards are designed to protect and promote the public health, safety, and welfare of citizens and to aid in the development and promotion of business and industry by providing sign regulations which encourage aesthetic creativity, effectiveness, and flexibility in the design and use of such devices without creating detriment to the general public.

411.2 SCOPE

The provisions of this article shall apply to the display, construction, erection, alteration, use, location, and maintenance of all signs within the City of Berea. It shall be unlawful to display, construct, erect, alter, use, or maintain any sign (to include signs erected or constructed prior to enactment of this article) except in conformance with the provisions of this article. This section authorizes the use of signs provided they are:

1. Compatible with their surroundings, pursuant to the objectives of proper design and land use amenities;
2. Designed, installed and maintained to meet the sign user's need while at the same time promoting the amenable environment desired by the general public;
3. Designed, constructed, installed and maintained in such a manner that they do not endanger public health and safety, or traffic safety.
4. Legible, readable and visible in the circumstances in which they are used;
5. Respectful of the reasonable rights of other advertisers whose messages are displayed.

Except as specifically provided, the following shall be exempt from the provisions of this article:

1. Signs which are not visible beyond the boundaries of the lot or parcel upon which they are located and/or from any public thoroughfare or right-of-way.
2. Official governmental notices and notices posted by governmental officers in the performance of their duties; governmental signs to control traffic or for other regulatory purposes, or to identify streets, or to warn of danger.

   Identification or bulletin board signs accessory to governmental buildings or other facilities shall not be exempt from the provisions of this article.

3. The flag, pennant, or insignia of any nation, organization of nations, state, county, or City; any religious, civic or fraternal organizations, or any educational institution, except when such are used in connection with a commercial promotion or as an advertising device.
4. Works of fine art which in no way depict, identify, or advertise a product or business.
5. Temporary decorations or displays, when such are clearly incidental to and are customarily and commonly associated with any national, local, or religious holiday or celebration.
6. Temporary or permanent signs erected by public utility companies or construction companies to warn of danger or hazardous conditions, including signs indicating the presence of underground cables, gas lines, or other similar devices.

7. Merchandise, pictures, or models of products or services which are incorporated as an integral part of a window display.
8. Signs displayed on trucks, buses, trailers, or other vehicles which are being operated in the normal course of a business, such as signs indicating the name of the owner or business which are affixed or painted onto moving vans, delivery trucks, contractor's vehicles and equipment, rental trucksand trailers, and the like, provided that such signs are clearly incidental to the use of the vehicle in conjunction with a bona fide business and are not for the purpose of display of signs; and provided that they are parked or stored in areas appropriate to their use as vehicles, and in such a manner and location on the lot so as to minimize their visibility from any street to the greatest extent feasible.

411.3 GENERAL PROVISIONS

411.31 Permit Requirements

A. Permit required. Except as otherwise provided in this subchapter, it shall be unlawful for any person to erect, construct, enlarge, move, or convert any sign in the City or county, or cause the same to be done, without first obtaining a sign permit for such sign from the Codes Administrator as required by this section. These directives shall not be construed to require any permit for a change of copy on any sign, nor for repainting, cleaning, and other normal maintenance or repair of a sign or sign structure for which a permit has previously been issued,

so long as the sign or structure is not modified in any way. No new permit is required for signs which conform with the requirements of this section on the date of its adoption unless and until the sign is altered or relocated.

B Application for permit. Applications for a permit shall be made to the Administrative Officer and shall include but shall not be limited to the

following:

1. A completed application form.
2. A site plan and/or building elevation drawing showing the location of the proposed sign(s) on the lot and/or building, including setbacks.
3. Detailed sign information including type of construction, method of illumination, dimensions, copy, method of mounting and/or erecting and other similar information.
4. The written consent of the owner of the underlying real property or authorized agent.
5. A permit fee.
6. All new signs from the date of enactment of this ordinance shall have the permit number painted on the sign in the lower right hand corner, readable by the Codes Administrator while standing on the ground. If the sign shall be a high rise, the number shall be placed on the base.
7. Temporary signs requiring a permit shall include in writing the purpose and the length of time for signs to remain in place. This includes streamers, banners, flags, and balloons for a special event and limited as to time period. Unless otherwise noted the maximum time shall be thirty (30) days for two separate occasions in the period of one (1) year.

411.32 Maintenance of Signs

If an outdoor advertising structure or surface is not maintained , the Codes Administrator shall notify in writing the owner, agent, or person having the beneficial use of the building, structure, or lot upon which the sign may be found, to alter such sign so as to comply with this ordinance within thirty (30) days. Upon failure to comply with this ordinance within the specified time period, the Codes Administrator is hereby authorized to cause removal of such sign, and any expenses incident thereto shall be paid by the owner of the structure or lot to which the sign is attached, and same shall constitute a lien against the property in the same manner as City ad valorem taxes.

411.33 Violations

In case any sign shall be installed, erected, constructed, or maintained in violation of any of the terms of this ordinance, the Codes Administrator shall
notify in writing the owner, agent, or person having the beneficial use of the building, structure, or lot upon which the sign may be found to alter such signs so as to comply with this ordinance within thirty (30) days. Upon failure to comply with this notice within the specified time, the Codes Administrator is hereby authorized to cause removal of such sign, and any expense incident

to removal as well as a fine of not less than $10.00 nor more than $25.00 shall be paid by the owner of the structure or lot to which the sign is attached, and same shall constitute a lien against the property in the same manner as City ad valorem taxes.

411.34 Prohibited Signs

The following prohibitions shall apply to signs in all districts, except as permitted elsewhere in this ordinance. Prohibited signs shall be removed upon enactment of this ordinance.

1. Streamers, pennants, banners, balloons, and flag signs or similar signs or devices except where permitted as a temporary sign as stated in Section 411.31, 7.
2. No spot light, flood light, luminous tubes or lighted signs shall be installed in so as to permit the direct rays of such light to penetrate into any residential building, or create a traffic safety hazard.
3. No advertising device, of which all or part is set in motion by movement of the atmosphere, including fluttering or rotating, except as permitted as a temporary sign as stated in Section 411.2
4. No sign, whether illuminated or not, shall project into the line of vision of a motorist or an official traffic sign at a street or railroad intersection within one hundred fifty (150) feet of such signal and no sign visible from the street shall contain the word "danger" or "stop" with the intent of simulating street, traffic, or other signs.
5. No wall sign shall be attached to or obstruct any window, door, stairway, fire escape, or other opening intended for egress or ingress of for needed ventilation and light.
6. No sign shall be attached to any tree, fence, or utility pole.
7. No flashing signs shall be permitted.
8. No mobile signs shall be permitted

411.35 Signs Allowed in All Districts and Not Requiring a Permit

The following signs may be erected in any land use district without obtaining a permit:

1. A sign advertising the sale, lease, or rental, of the premises upon which the sign is located. Such sign shall not exceed six (6) square feet in area in all residential districts and twelve (12) feet in all other districts.
2. Professional name plates, not to exceed four (4) square feet in area.
3. Signs denoting the name and address of the occupant of the premises, not to exceed two (2) square feet in area.
4. Temporary signs not exceeding thirty-two (32) square feet in surface area, denoting architectural, engineering, construction, or related firms engaged

in the work on a construction site. The sign shall be removed not more than ten (10) days after construction is completed.

5. Temporary signs announcing or relating to a campaign, drive, or event of a civic, philanthropic, educational, or religious organization. Signs are not to be installed more than thirty (30) days prior to the activity, and must be removed no more than five (5) days after its completion.
6. Temporary signs announcing or relating to a political campaign, not to exceed four (4) by eight (8) square feet in area are permitted in all districts provided, 1) the candidate shall obtain a permit from the codes enforcement officer, 2) the sign not be placed on a public right- of-way or private property without permission from the land owner, 3) the sign shall not be displayed more than thirty (30) days prior to and election and no longer than five (5) days after, and 4) no penalty shall be assessed provided that any candidate who violates the ordinance shall pay the cost of removing the sign Berea City Code 06-03.
7. Identification sign containing the name of a community and the names of various civic organizations.
8. One non-illuminated or directly illuminated sign or bulletin board customarily incidental to places of worship, libraries, museums, schools, or other public institutions with sign or bulletin board shall not exceed twelve (12) square feet in area and which shall be located on the premises of such institution.
9. Any sign now or hereafter existing, which no longer advertises a bona fide business conducted, product sold, or activity being conducted, shall be taken down and removed by the owner, agent, or person having the beneficial use of the building, structure, or lot upon which such sign may be found, within ten (10) days after written notification by the Codes Administrator within the time specified in such order. Upon failure to comply with such notice within the time specified in such order, the Codes Administrator is authorized to cause removal of such sign, and any expense incident thereto shall be paid by the owner of the building, structure, or lot to which such sign is attached.
10. Any sign painted directly on the surface of any wall shall be repainted as needed, and a permit shall be required for such repainting. If the repainted sign should result in exceeding the total surface sign area allowable in the respective business or industrial district for such sign, said sign shall be painted out, otherwise removed or reduced in surface area to conform to such limitations.
11. Gooseneck and thin line reflectors and lighting shall be permitted on indirectly illuminated signs provided such reflectors and lights do not extend more than six (6) feet beyond the sign structure to which attached and such illumination is directed upon the face of the sign to reduce the possibility of direct light rays shining into adjoining property or public way.

12. No light, sign, or other advertising structure shall be erected in such a manner or location as to be confused by reason of position, shape, or color with any authorized sign, signal, or device.
13. Off-premise or non-accessory signs shall be limited to the B-2 Business District where no more than one (1) such sign shall be permitted per lot. Such signs must fall within overall number and total area restrictions.

411.36 Signs Permitted, By Districts

411.361. Residential Districts

The following signs shall be permitted in all residential districts with the securing of a valid permit:

1. One (1) non-illuminated or indirectly illuminated temporary tract sign not exceeding thirty-two (32) square feet in area in subdivisions, setback from every street line the distance required for a principal in such district.
2. One (1) non-illuminated or indirectly illuminated temporary tract sign or real estate sign for each additional arterial or collector street adjacent to such tract or property, provided the total number of such signs does not exceed four (4).
3. One (1) non-illuminated or indirectly illuminated subdivision sign not exceeding thirty-two (32) square feet, provided that it is of permanent construction.

411.362 R-3 Districts

1. One (1) non-illuminated or indirectly illuminated sign indicating only the name of the building/business not exceeding sixteen (16) square feet in area, mounted on the face of the building.
2. Non-illuminated or indirectly illuminated directional signs indicating entrance, exit, or location of parking area accessory to the principal use, not exceeding six (6) square feet in area and three (3) feet in height, and not extending over the traveled portion of the street.

411.363 B-1 Business Districts

1. Signs as permitted in the residential districts.
2. The total number of business signs on a lot shall not exceed three (3).
3. The total surface area of all business signs shall not exceed the sum of two (2) square feet of area for each lineal foot of street or building frontage (whichever is greater). Each street frontage is considered

separately.

4. No wall sign shall project above the roof or parapet line more than thirty-six (36) inches, nor extend more than twelve (12) inches from the wall to which it is attached. No projecting signs shall be permitted.
5. A new sign shall not unreasonably block the line of sight from the public right-of-way to an existing sign.

411.364 B-2 Business Districts

1. Signs as permitted in B-1 districts.
2. The total number of business signs on a lot shall not exceed four (4).
3. The total surface area of all business signs may be thirty-two (32) square feet for any lot width, but may not exceed three (3) square feet for each lineal foot of street frontage of the lot. Each building frontage is to be considered separately.
4. Only one (1) projecting business sign shall be permitted for each separate street frontage of a business occupancy, in no event to exceed a total combined surface area of one hundred (100) square feet.
5. The bottom of projecting business signs shall be at least ten (10) feet but not more than twelve (12) feet above ground level. The sign shall be set back from the curb or traveled portion of the street at least four (4) feet.
6. Roof signs are permitted, but no sign erected upon the roof of a building shall extend higher than twenty-five (25) feet above the roof at the point of mounting. No roof sign shall exceed three hundred (300) square feet in surface area. No more than one (1) roof sign per building shall be permitted. Superstructure of sign must meet the current building code requirements for wind load.
7. No flat wall sign shall project above the roof or parapet line more than forty-eight (48) inches.
8. A new sign shall not unreasonably block the line of sight from a public right-of-way to an existing sign.
9. Free-standing signs are permitted as permitted in the B-1 Business District except that a single free-standing sign may exceed one hundred (100) square feet in surface area in which case only one (1) sign shall be permitted per facing, and no such structure shall exceed five hundred (500) square feet of surface area or thirty (30) feet in height.
10. Off-premises or non-accessory signs shall be limited to the B-2 District where no more than one (1) such sign shall be permitted per lot. Such sign must fall within overall number and total area restrictions.

411.365 B-3 Business Districts

1. All signs shall be wall signs, except that two (2) free-standing signs for shopping center identification shall be permitted provided there is a

minimum setback of twenty-five (25) feet, and in no case shall the height of such signs exceed seventy (70) feet.

2. For regional shopping centers, each free-standing sign shall not exceed ten (10 square feet of surface area per acre in the shopping center with a maximum of five hundred (500) square feet of surface area.
3. For neighborhood or community shopping centers, each free-standing sign shall not exceed three hundred (300) square feet in surface area.
4. A permanent marquee or attraction board may be attached to the free-standing identification signs permitted above. The area of the attraction board shall be included when computing the total surface area of the sign. This board may not be erected separate from the free-standing identification sign.

411.366 B-4 Business Districts

1. Signs as permitted in B-1 and B-2 districts
2. Total number of business signs shall not exceed seven (7). All signs shall be wall signs except two (2) free-standing signs shall be permitted per lot.
3. Total surface area of business signs shall not exceed seven (7) square feet for each lineal foot of street frontage of the lot. Only one (1) frontage is to be considered for this calculation.
4. Excluding directional signs, two (2) free-standing signs are permitted per lot, but only one (1) sign may exceed thirty (30) feet in height. Such interchange identification sign must be oriented to serve the interstate highway and may not exceed ninety (90) feet in height or four hundred (400) square feet in area. Free-standing signs shall be set back at least ten (10) feet from the nearest lot line.
5. New signs shall not unreasonably block the line of sight from a public right-of-way to an existing sign.
6. Off-premises or non-accessory signs shall be limited to not more than one (1) sign per lot. Such sign must fall within the overall number allowed and within total area restrictions.
7. Existing signs which do not conform with these regulations may be continued as non-conforming uses.

411.367 Professional Districts, P-1

1. Signs are permitted in residential districts.
2. One (1) identification sign for each individual building not to exceed thirty-two (32) square feet or five (5) percent of the wall area, whichever is greater, indicating only the name and address of the building and the name of the business. If free-standing, the same size limitations apply. Height shall not exceed fifteen (15) feet nor shall the sign obstruct traffic

or official signs.

411.368 Industrial Districts, I-1 and I-2

1. Signs as permitted in business districts
2. Additionally, each industry shall be permitted one (1) flat or wall sign. Projection of wall signs shall not exceed two (2) feet as measured from the face of the main building.
3. The surface area of all permanent advertising signs for any single enterprise shall not exceed three hundred (300) square feet.
4. One (1) free-standing identification sign displaying only the name and address of the industry may be erected for each separate street frontage, not to exceed one hundred (100) square feet in size. Such signs shall have a maximum height of twenty-five (25) feet.
5. Directional signs shall be permitted as necessary.

411.369 Public and Semi Public Facilities Districts

1. Signs for internal directional use shall not require permit.
2. On public right-of-way, signs shall require a permit and shall be subject to requirements of setback and size as deemed necessary by the Codes Administrator.

411.370 Mobile/Manufactured Home Park/Community Districts

1. For each mobile/manufactured home park/community, one (1) free-standing identification sign displaying only the name and address of the park/community may be erected for each separate street frontage, not to exceed twenty-five square feet in area. Such sign shall have a maximum height of ten (10) feet.

411.37 Non-Conforming Signs

1. A legal non-conforming sign may continue in existence and shall be properly maintained in good condition. These sign regulations shall not be construed to prevent the strengthening, repair, or restoration of any sign to a safe condition, but a non-conforming sign shall not be:
   a. Changed to another non-conforming sign; except where only the faces or the messages are changed, or where the sign is reduced in height, size, or area.
   b. Structurally altered (except to meet safety requirements) so as to prolong the life of the sign.
   c. Altered so as to increase the degree of non-conformity of the sign.
   d. Expanded or enlarged.

e. Re-established after its discontinuance.
f. Continued in use after creation or change of the business or activity to which the sign pertains.
g. Moved to a new location on the building or lot.

411.38 Sign Requirements for Institutional Zones

The following signs shall be permitted in an INS District:

(a.) Signs for internal directional use shall not require a permit
(b.) On public right-of-way, signs shall require a permit and shall be subject to requirements of setback and size as deemed necessary by the Codes Enforcement Officer.
(c.) Any projecting or free-standing sign shall require a permit
(Ord. No. 11.84, 6-19-84)

412 CELLULAR ANTENNA TOWERS

412.1 Purpose: Due to the semi-public nature of cellular antenna towers and other wireless communications systems, it is the purpose of this section to regulate these facilities in order to:

1. Accommodate the need for cellular or wireless communications towers while regulating their location and number in the City of Berea.
2. Minimize the adverse visual effects of such facilities through proper siting and design.
3. Avoid potential damage to adjacent properties from structural failure of communication towers and support structures.
4. Encourage the joint use of any new and existing communications towers and support structures in order to reduce the number of such structures needed in the future.

412.2 Use Regulations: The following regulations shall apply to cellular or wireless communication antennas and towers:

1. New cellular or wireless communication antenna towers, or antennas to be mounted to an existing communications tower may be located in all districts except single-family residential districts. This requirement may be waived if there are no other alternatives available.
2. Any cellular or wireless communications antenna that is mounted to an existing structure shall be compatible in color with that structure.
3. Cellular or wireless communications sites shall not be located any closer than 1,000 feet from any residential district.
4. The cellular or wireless communications company shall be required to demonstrate, using the latest technological evidence that the antenna or tower must be placed where it is proposed in order to satisfy its necessary function in the company's grid

system.

5. If the cellular or wireless communications company proposes to build a new tower as opposed to mounting an antenna on an existing structure, it is required to demonstrate that it has contacted the owners of nearby tall structures within a one (1) mile radius of the site proposed, and has asked for permission to install the cellular or wireless communications antenna on these structures, and was denied for reasons other than economic ones. "Tall structures" shall include, but not be limited to, smoke stacks, water towers, buildings over 50 feet in height, antenna support structures or other cellular or wireless communications companies, other communication towers, and roadway lighting poles.
6. The City may deny the application to construct a new cellular or wireless communications tower if the applicant has not made a good faith effort to mount the structure on existing structures.
7. The applicant shall demonstrate that the antenna/tower is to be constructed at the minimum height necessary in order to function satisfactorily. The applicant shall demonstrate that the proposed cellular or wireless communications tower and its antenna are safe and the surrounding properties will not be negatively affected by tower failure, falling ice, or other debris, electromagnetic fields or radio frequency interference. In addition, all towers shall be fitted with anti-climbing devices as approved by the manufacturers, and shall be enclosed (along with support structures) by a fence that is a minimum of eight (8) feet in height to prevent unauthorized access.
8. In order to limit the number of antenna support structures needed in the future, the proposed new tower shall be required to accommodate other users, including other cellular or wireless communications companies, and local law enforcement and emergency agencies.
9. The applicant must demonstrate that it is licensed by the Federal Communications Commission (FCC) to engage in such activities.
10. A site development plan shall be required as part of the application process.

413 OUTDOOR LIGHTING

The following regulations shall apply to any outdoor lighting located within the City of Berea, in any district where there are parking spaces for five (5) or more vehicles, or where a building, sign, or electrical permit is required for the installation of lighting fixtures.

A. Submission of Lighting Plan

Any building, structure or use of land that requires a review and approval of a parking plan, as specified in this article, shall provide a lighting plan. A lighting plan may also be required at the determination of the Administrative Official, when a building, sign, or electrical permit application for lighting fixtures is filed. The lighting plan shall provide the following information as a minimum:

1. A photometric plan showing the proposed intensity levels of the lighting throughout the site, indicating footcandle measurement. The lighting plan shall include the property lines and right-of-way lines for the site, and shall include the first fifty feet of adjacent property, at a minimum. Light levels shall be indicated a minimum of thirty feet onto adjacent properties. The lighting plan shall indicate all site lighting including on-building security, flood, and other lights in the evaluation. The initial output of lamp fixtures, as defined by the manufacturer, is the value to be considered in the intensity analysis.
2. The lighting plan shall indicate the locations of each of the proposed fixtures.
3. The lighting plan shall indicate the minimum, maximum, and average intensity/ illumination for the site.
4. Details of all proposed outdoor lighting fixtures shall be provided, indicating manufacturer, model and style of the fixture. A graphic representation of the fixture is requested. The fixture lamp type (i.e. low pressure sodium, metal halide, etc.) shall be indicated on the proposed plans.
5. The proposed height of the lighting fixtures shall be indicated.
6. The hours of use of the lighting fixtures shall be indicated on the plans.

B. Height

All outdoor lighting shall be designed, located, and mounted at heights no greater than twelve (12) feet above grade for non-cutoff-lights and twenty-two (22) feet above grade for cutoff lights. A greater height may be authorized in any district by a variance approved as required in Section 404. Lighting height should not exceed the permitted building height. The following guidelines are provided based on the intensity of the proposed use.

<u>Height Range by Activity Level</u>:

Low: 10 ft. to 15 ft.; medium: 10 ft. to 18 ft.; high: 10 ft. to 22 ft.

<u>Average illumination by Activity Level</u>:

Examples of Activity Levels for Open Parking Facilities:

High: Regional shopping centers, motorist services at expressway interchanges, athletic facilities, regional cultural or civic facilities.

Medium: Community and neighborhood shopping centers, office parks, hospitals, commuter lots, community facilities (cultural, civic, recreational).
Low: Multi-family dwellings, education facilities, churches, local commercial and industrial uses.

C. Illumination

Outdoor lighting shall be designed and located with a maximum illumination of 0.5 footcandles at the property line. Lighting for parking areas and where security lighting is needed shall have a minimum of 0.5 footcandles. The guidelines for illumination levels listed below are based on the activity levels described above.

Average Illumination by Activity Level

Low: 1.0 footcandle; medium: 2.0 footcandles; high: 3.0 footcandles.

Maximum Illumination (footcandles) by Activity Level

Low: 5.0 footcandles; medium: 10.0 footcandles; high: 15.0 footcandles.

Uniformity of Illumination (maximum/minimum footcandle ratio)

Should not exceed 15.1

Illumination of Access Drive

Should not exceed average footcandles maintained at adjacent public road.

D. Light Trespass

Light trespass is any form of artificial illumination emanating from a light fixture (or illuminated sign) that penetrates other property and creates a nuisance. A lighting plan shall be provided by the property owner proposing the installation of outdoor lighting fixtures and shall meet the following minimum standards for light trespass:

1. Outdoor light fixtures shall be directed so that there will not be any objectionable direct glare source visible from any property, and shall be properly installed and thereafter maintained.

2. At a height of five (5) feet above the property line of the subject property, illumination from light fixtures shall not exceed 0.5 footcandles in a vertical plane on adjacent property.

3. Appropriate fixture lamp types and shielding shall be installed to prevent light trespass onto adjacent property.

E. Shielding

All outdoor lighting for non-residential uses shall be located, screened, or shielded so adjacent lots located in residential districts are not directly illuminated. Shielding may also be required for high intensity light fixtures to prevent glare to adjacent uses, public right-of-ways, and drivers. Perimeter lighting should be cut-off fixtures to prevent light trespass onto adjacent properties.

F. Color and Glare

No outdoor lighting shall be of such intensity or color distortion as to cause glare or to impair the vision of drivers, pedestrians, or adjacent properties. Shields and/or filters are required for light fixtures with high intensity and glare potential. All lighting shall be provided by cut-off fixtures with no extended/projected lenses.

G. Factors for Evaluation

The following factors shall be considered in the evaluation of lighting plans:
Pole height
Type of luminaire
Site coverage - average maintained
Uniformity: (1) maximum:minimum, (2) average:minimum
Intensity at property line

H. Location

Outdoor lighting need not comply with the yard requirements of each district, except that no such light shall obstruct vision in the sight triangles as specified elsewhere in this ordinance.

I. Exemptions

1. All outdoor lighting fixtures producing light directly by the combination of fossil fuels, such as kerosene lanterns of gas lamps, are exempt from the requirements of this section.
2. Holiday lighting shall be exempt from the requirements of this section.
3. All temporary emergency lighting needed by police or fire departments or other emergency services, as well as all vehicular luminaires, shall be exempt from the requirements of this section.

J. Special Approval

Search lights, laser source lights, or any similar high-intensity light shall not be permitted, except in emergencies by police and fire department personnel at their discretion, unless a temporary sign/use permit is issued by the Codes Administrator.

K. Modifications

Should any outdoor light fixture or the type of light source therein be changed after the permit has been issued, a change request must be submitted to the Codes Administrator for his approval, together with adequate information to assure compliance with this section, which must be received prior to substitution.

ARTICLE V
THE DIVISION AND DEVELOPMENT OF LAND

500 PURPOSE

The purpose of Article V is to regulate the subdivision and subsequent physical development of the land within the City limits of Berea to ensure that lots, streets, sidewalks, public utilities, drainage facilities, and other related items are completed in such a way as to protect the health, safety, and general welfare of the public. These regulations spell out the procedure for submission, review, and recording of plats, the specifications for format and contents of all subdivision plats, requirements for design of and specifications for lot layout, physical improvements of streets, utilities, and other facilities, and the extent to which they shall be installed or dedicated as conditions precedent to approval of any plat. In addition, provisions for good and sufficient surety to insure proper completion of physical improvements, and specifications for the extent to which land is to be used for public purposes are included.

501 AUTHORITY

The legal authority for the division and development of land is based upon KRS 100.277 as follows:

A. No person shall subdivide any land before securing the Planning Commission's approval of a plat designating the areas to be subdivided, and no plat of a subdivision of land within the planning unit's jurisdiction shall be recorded by the County Clerk until the plat has been approved by the Planning Commission and the approval entered thereon in writing by the chairman or other authorized officer of the Planning Commission.

B. No person owning land comprising a subdivision shall transfer, sell, or agree to sell any lot or parcel of land located within a subdivision by reference to, or by exhibition, or by any other use of a plat of such subdivision, before such plat has received final approval by the Planning Commission, and has been recorded. Any such instrument of transfer, sale, or contract shall be void and shall not be subject to be recorded, but all rights of such purchaser to damages are hereby preserved. The description of such a lot or parcel by metes and bounds in any contract or instrument of transfer or other document used in the process of selling or transferring same shall not exempt the person attempting to transfer from penalties provided, or deprive the purchaser of any right or remedies he/she may otherwise have.

C. When a tract of land is being divided and the property owner declares that the intended use is for agriculture, the Planning Commission shall review all survey plats or deeds submitted for recording by the county clerk as an agricultural exemption. When a tract of land is being divided

and the property owner seeks an agricultural exemption the owner must give testimony and provide a written notarized affidavit stating that the primary use of the land is for agricultural use and not for residential building development for sale or lease to the public (see definition of Agricultural Use). Additionally, the Planning Commission may require that a statement be placed on the plat that the land is not to be used for residential building development for sale or lease to the general public. The Codes Administrator shall review the proposed plat to ensure that the affidavit is valid.

502 ADMINISTRATIVE PROCEDURES

502.1 Planning Commission Authority and Responsibilities:

The Berea Planning Commission shall be responsible for administration of this section of the ordinance and shall have the authority to engage in the following activities:

(1) Review, process and take final action on all plans and plats as described in these regulations.
(2) Receive applications, fees, drawings and maps as a result of subdivision review of various plats and plans and coordinate inspection services for constitution of public improvements.
(3) Distribute copies of submitted plans and plats to various legislative units and utility companies for review, comment and/or approval.
(4) Maintain files for subdivision plats and plans.
(5) Seek advice if necessary from consultants and other local, regional, and state agencies regarding subdivision proposals.
(6) Hear and take action on dimensional variances for newly created lots . In determining whether a variance should be granted or not, the Planning Commission shall use the criteria outlined in KRS Chapter 100.
(7) Hear and take action on individual waiver requests other than dimensional variances to seek relief from a requirement in the regulations. Upon written request by the subdivider of the lot the Planning Commission shall review and take action on a waiver request as a result of an unusual or extreme circumstance, while still meeting the intent of these regulations. Such circumstances may include new construction technology, existing topography, or site conditions that have existed

for some time and are not the result of actions of the applicant; provided that solely financial circumstances considerations shall not constitute a hardship. A waiver request must clearly demonstrate such creates a hardship placed upon the applicant; how the waiver will alleviate the hardship, and the effect of the waiver on the planning process, and how the intent of the regulations will still be met.

502.2 The City Council's Authority and Responsibilities:

The City Council 's authority and responsibilities as governed by these regulations consist of the following.

(1) Oversee on-site construction inspections of public improvements in accordance with the approved plans or plats unless delegated to the Planning Commission.
(2) Assure that all inspected public improvements are complete and have been constructed in accordance with the plans, plats, and specifications as approved by the Planning Commission and as required by each legislative unit and utility.
(3) Review guarantees and bonds for the proper installation of public improvements as described in these regulations.
(4) Make recommendations to the appropriate City agency for maintenance purposes of public improvements (includes street rights-of-way and utilities) on record plats approved by the Planning Commission.

502.3 Amendments

The Planning Commission may revise, modify, or propose regulations by appropriate action taken at a scheduled meeting after the required notice and subsequent public hearing. All amendments are referenced in the beginning of this document and have been adopted in accordance with KRS Chapter 100.

502.4 Procedures for Obtaining Subdivision Approval

The procedure for obtaining approval of a subdivision plat from the Planning Commission generally includes the following:

(1) Voluntary advisory meeting with the Planning Commission staff.
(2) The definition and determination of minor or major subdivision review.
(3) Minor subdivision - plat review and approval. If the minor plat meets all requirements, the Commission does not review it, and it is signed by the chair.
(4) Major subdivision - preliminary plat review and approval - development plan review and approval - record (final) plat review and approval.

The Planning Commission is assisted by the Technical Advisory Committee (TAC) in the review process. The TAC shall consist of the Code Administrator, Police Chief, Fire Chief, Sewer Superintendent, Street Superintendent, utilities representatives, City Engineer, and other representatives as specified by the Planning Commission. The TAC shall review all plats for compliance with the technical provisions of the regulations prior to submission of the plat to the Planning Commission. The TAC shall meet monthly prior to the regular meeting of the Planning Commission. The following chart briefly outlines the procedures and types of subdivision reviews:

SUBDIVISION PLAT AND DEVELOPMENT PLAN REVIEW PROCESS
Optional Advisory Meeting with
Planning Commission

*8 copies of minor/final plat; if residential; commercial plats will require 15 copies for Planning Commission Review. 15 copies of preliminary plat/development plan.

Code Administrator's Review:
The Codes Administrator reviews the plat/development plan and checklist to ensure that all items have been properly addressed.

If all requirements are met,

If all requirements are not met, the must resubmit.

TAC Review:
The plat/development plan is submitted to the TAC for its review and recommendations.

Once the Preliminary Plat is approved, the final plat may be submitted 30 days after approval and must be complete with any/all conditions met. Approval lapses within 60 days if all items are not completed.

Planning Commission Review:
The recommendations of the TAC are passed on to the Planning Commission for review of all required items in a work session.

If preliminary plat

Final/Minor Plat shall be recorded in the County Clerk's Office within one year of approval or it expires. The subdivider shall provide evidence to the Codes Administrator that the plat has been filed, within 30 days of the filing.

The Plat/Development Plan returns to the Planning Commission on the business meeting date for formal review and official approval or disapproval.

If final/minor plat or Dev. Plan

If denied

502.41 Advisory Meeting With the Planning Commission

Prior to the preparation of any subdivision plan or plat, a subdivider or applicant is encouraged to meet with the Planning Commission's Codes Administrator or staff in order to expedite the processing or review of each subdivision plan or plat. This meeting is intended to familiarize the subdivider with the current regulations and to ascertain the location of any planned development projects and infrastructure, which may affect the property being considered for subdivision. This step does not require a formal application or the filing of a plat with the Planning Commission, but does require the subdivider to submit the following information:

(1) Name of the subdivision, date, direction to the site, north arrow, and scale.
(2) Name and addresses of property owner(s).
(3) A sketch plat of the property showing shape, approximate dimensions, and total acreage.
(4) A vicinity map showing the general location of the property, existing roads, surrounding property, and major physical features.
(5) Generalized layout of proposed streets and lots.
(6) Available and proposed utilities
(7) Relationship to services, including schools, parks, etc.
(8) Intended use for all parcels of land

502.42 Minor Subdivisions

The Administrative Official shall determine whether the proposed subdivision constitutes a minor or major subdivision. To qualify as a minor plat, a subdivision must meet one of the following requirements:

(1) The subdivision contains no more than three (3) contiguous lots (counting the remainder of the parent tract). If more than three lots are involved then said lots shall be handled as a major subdivision and processed as a preliminary and final plat.
(2) The parcel to be subdivided will not involve the construction of any public water lines, storm or sanitary sewers, and streets, which require review and processing through preliminary and final plats.
(3) The subdivision provides for the transfer of land between adjacent property owners and does not involve the creation of any new lots or building sites.
(4) The subdivision includes any number of lots of record that are being consolidated to create a lesser number of parcels and involves no new public improvements.

Any plat that does not meet the above criteria shall be considered a major plat. Subdivision plats that are submitted for multi-family residential, commercial, or industrial development shall be considered as major plats and are subject to the preliminary and final plat review process and submission of development plans.

502.421 Minor Plat Submission

The subdivider shall submit to the Codes Administrator eight (8) signed copies of the minor plat prepared in accordance with all applicable requirements of this ordinance. For a list of information items to be provided in a minor plat, see Minor Plat Requirements in Appendix H. The Codes Administrator shall review the minor plat to insure that it meets all the applicable requirements, and shall take one of the following actions; 1) approve the minor plat; or 2) disapprove the minor plat. If the minor plat is disapproved, written notice of such action, including the reasons for disapproval shall be mailed to the applicant and notification given to the Chairman of the Planning Commission. If the minor plat is approved, the Chairman of the Planning Commission shall sign the minor plat which shall be recorded at the expense of the applicant in the county clerk's office.

502.43 Major Subdivisions

Any subdivision not meeting the requirements of Section 502.42 shall be considered as a major plat and subject to a two step review process; 1) review of the preliminary plat, and 2) review of the final plat.

502.44 The Preliminary Plat

The purpose of the preliminary plat is to provide a graphic statement of the proposed development of a tract of land. No work shall be permitted on land to be subdivided until the preliminary plat has been approved by the Planning Commission. The preliminary plat is "preliminary" in the sense that the Planning Commission may make recommendations for improving the design or improvement standards before they become finalized on the land. Upon approval of the preliminary plat by the Planning Commission, the developer is authorized to proceed with the development of the approved plan and the construction of public facilities. If the proposed subdivision is to be constructed in more than one phase,

the developer shall show the entire proposed development on the preliminary plat. Phases shall occur in such a way as to minimize
he cost of extending utilities.

502.441 Submission

The developer shall apply for approval of a preliminary subdivision plat on the application form provided by the Department of Codes and Planning. The completed application shall be submitted to the Codes Administrator along with the plat and the Plat Requirements Checklist in accordance with the requirements of Section 503. The preliminary plat shall be prepared by a registered engineer at a scale of not less than one hundred (100) feet per inch, and shall be on one or more sheets 24 x 36 inches in size. When preliminary plats are being submitted for development, the location of at least three (3) physical monuments shall be labeled as to their State Plane Coordinate position expressed in U.S. Survey Feet based upon NAD 83 KY South Zone and all parcel lines and street centerlines shall be geometrically tied to these monuments.

502.442 Number of Copies

The developer shall submit fifteen (15) copies of the preliminary plat with required construction drawings and supplementary information to the Codes Administrator for distribution to the Technical Advisory Committee (TAC) and the Planning Commission for review and recommendations and copies of construction plans to be submitted.

502.443 Plat Review

The TAC shall conduct a technical review of the plat and submit written comments to the Planning Commission at the Planning Commission work session. These comments will focus on any concerns or conditions to be met in gaining approval that need to be addressed regarding the plat. The Planning Commission shall review the report of the TAC and shall

receive additional information at its regular work session. The developer or an authorized representative shall be present at the meeting to answer questions or provide additional information. The intent of the work session is to generate discussion and provide pertinent information needed by the Planning Commission in their decision-making process. Any conditions to be met in gaining approval shall be met before the plat can be voted on, with any exceptions being determined by the Planning Commission. Final consideration of the proposed preliminary plat will normally be made during a Planning Commission business meeting (regular or special called). In determining whether a preliminary plat shall be approved, the Planning Commission shall consider the following:

(1) Conformance with plat requirements.
(2) Adequate infrastructure to support development, interconnection of proposed streets with existing or future streets, and location of all public and semi-public spaces and buildings to include parks, schools, homes, utilities, businesses and industries.
(3) Distribution of population and traffic in a manner so as to create conditions favorable to health, safety, convenience, efficiency, sustainability, and the harmonious development of the community.
(4) Comments from other agencies and officials. Notice shall be given to other local governments if the subdivision includes a street extending into their jurisdiction.
(5) Comments expressed by the public at the Planning Commission meeting.
(6) Conservation/protection of natural resources.

Regarding highway access, a preliminary plat may receive conditional approval pending receipt of an access permit from the state highway department (if applicable).

502.444 Planning Commission Action

Within sixty-five (65) days of the Planning Commission business meeting on the preliminary

plat, the Commission shall make one of the following decisions; 1) approve the plat, 2) approve the plat subject to conditions, 3) disapprove the plat, unless such time is extended by agreement of the Planning Commission and the developer, or 4) postpone taking action for specific stated reasons up to thirty (30) additional days. If the Planning Commission finds that the preliminary plat does not meet the requirements of the regulations, it shall either disapprove the plat or conditionally approve the plat, subject to specified revisions being met within the 65 day period. Approval of the preliminary plat by the Planning Commission does not constitute final approval of the subdivision, but is merely an authorization to proceed with the preparation of the final plat and construction of public facilities. In the event of a disapproval or conditional approval of the preliminary plat, a statement in writing by the Planning Commission setting forth the reasons for disapproval or the conditions approval shall be entered into the records of the Planning Commission. Any conditions set for approval of the preliminary plat must be met within thirty (30) days of conditional approval pursuant to the bylaws of the Planning Commission.

502.445 Effective Period of Approval

At such time as a preliminary plat has been approved by the Planning Commission, one copy shall be returned to the developer for compliance with final approval requirements. Such approval shall be effective for one (1) year from the date of approval. During that time, the general terms and conditions under which the preliminary plat was granted will not be affected by any changes to these regulations. An extension of twelve (12) months may be granted provided the developer submits a written request to the Planning Commission and it is approved.

502.446 Adjustment of Preliminary Plat Requirements

The Planning Commission may waive a specific requirement of the plat requirements provided no waiver shall be granted which will have the effect of nullifying the intent and purpose of the regulations (see 502.1 (8)). Economic hardship shall not be deemed a sufficient basis for granting a waiver. In granting any waiver, the Commission shall attach such conditions as are necessary in its judgment to secure substantially the objectives of the requirements being adjusted.

Any waiver of these requirements shall be requested specifically in writing by the developer with reference to the particular section to be waived. This request shall be accompanied by the submission of the preliminary plat and be entered in the minutes of the review meeting.

502.447 Amending the Preliminary Plat

If the developer desires to make a substantial change in a preliminary plat that has been approved by the Planning Commission (such as in the number of lots, major realignment of streets, or use of previously dedicated property), an amended preliminary plat must be submitted in accordance with procedures previously described.

502.55 Final Plat

The final plat serves as a plat of record for public recording and transfer of land, and as a check to assure that subdivision requirements (including any conditions stipulated in the preliminary plat) have been met. The final plat shall conform substantially to the preliminary plat as approved, and it may constitute only a portion of the preliminary plat which the developer proposes to develop and record. No final plat shall be approved until at least twenty-eight days following the approval of the preliminary plat. No final plat will be reviewed by the Planning Commission at the business meeting until the following on-site improvements have been completed; 1) the roadbase, excluding the final 1 ½ inch surface coat, 2) waterlines, 3) sanitary sewers, 4) drainage structures, 5) soil erosion control measures, and 6) curbs and gutters. In addition, any required off-site improvements must be completed and as-built drawings provided. See appendix "G'.

502.551 Submittal

Within one (1) year of approval of the preliminary plat, the developer shall file the final subdivision plat for review and action by the Planning Commission. Failure to submit the final plat within a year's time shall require re-approval of the expired preliminary plat. An extension of one (1) year may be granted provided the developer submits a written request to the Planning Commission and it is approved.

The developer shall submit an application for final plat approval along with the plat requirements checklist to the Codes Administrator. At the time of filing, a non-returnable filing fee shall be paid according to the fee schedule. The final plat shall be prepared by a registered engineer or surveyor (as applicable), at a scale of not less than one hundred (100) ft. per inch on one or more sheets 24 x 36 inches in size. In addition to hard copies, all final plats are to be submitted in digital format for G.I.S. mapping purposes only as provided for in the Berea G.I.S. Guidebook.

502.552 Number of Copies

Fifteen (15) copies of the final plat, together with any street profiles or other plans that may be required, shall be submitted to the Codes Administrator.

502.553 Plat Review

The Technical Advisory Committee shall review the final plat as to computations, certifications, monuments, and related items, to insure that all required improvements have been completed to the satisfaction of City engineering standards. The TAC shall submit a written report to the Planning Commission for their consideration in reviewing the plat. In case a security bond, certified check, or irrevocable commercial letter of credit has been posted, the developer's engineer shall provide a detailed breakdown of the individual project development costs as well as the percentage of work completed on each improvement. The developer's engineer shall verify that the amount of the surety is sufficient to cover the cost of required improvements yet to be completed.

502.554 Planning Commission Action

Within forty-five (45) days after the review of the final plat, the Planning Commission shall approve or disapprove the plat. Failure of the Planning Commission to act upon the this final plat within thirty-five (35) days shall be deemed approval of the plat. If the plat is disapproved, the grounds of the disapproval shall be stated in the records of the Planning Commission and the developer will be notified of the reasons for disapproval. Approval by the Planning Commission shall not constitute acceptance by the public of the dedication of any streets, other public way, or ground. When streets have been constructed, inspected, and approved, the dedicated street or City way shall be accepted for maintenance by the City within forty-five (45) days and shall be a public way for all purposes.

503 PLAT REQUIREMENTS

The requirements for submission of preliminary (P), and final (F) plats are indicated on the requirements checklist that follows (X indicates not applicable):

		P	F
1.	Name of the subdivision/dev. plan, date, label, type, graphic scale, north arrow, north at the top (or within 90 degrees of the top of the page), acreage to be subdivided, current land use classification, and purpose.	Z	Z
2.	Name, address, and telephone number of the property owner, subdivider (if other than the owner), and developer; written permission by the owner of the land for (name) to represent the owner at the Planning Commission meeting.	Z	Z
3.	Name, address, and seal of the registered professional land surveyor or engineer responsible for preparation of the plat and supplementary	Z	Z
4.	Names of adjacent property owners of record (with deed book references) and abutting subdivisions and streets.	Z	Z
5.	Vicinity sketch map, at a scale of two thousand (2,000) feet per inch or greater, showing the subject property and surrounding land within within one-half (½) mile, and including existing roads with at least one intersection of common reference, scale, north arrow, and an outline of the subject property. Boundary lines and streets in adjacent subdivisions shall be shown, along with how they connect with streets in the proposed subdivision, to assure the most advantageous development. Existing schools, parks, shopping centers and other major facilities shall be shown.	Z	Z
6.	The proposed subdivision shall be shown at a scale of not more than one hundred (100) feet per inch (except where sheet size is prohibitive). Boundaries of the tract will be drawn showing all bearings and distances.	Z	Z
7.	The plat will show physical features such as streams, ponds, wooded areas, existing structures, and sink holes.	Z	Z
8.	Existing topographic contours at an interval of not greater than five (5) feet shall be shown for the subject property. Where topographic conditions warrant, a contour interval of two (2) feet may be required. Contours shall be shown on all plats.	Z	Z
9.	If the property fronts on a state highway, obtain and submit with	Z	Z

the plat, a properly signed State Highway Encroachment Permit.

10. Location, dimensions, and names of existing streets, railroads, easements, municipal boundaries, or other public properties, and significant features shall be shown within and adjacent to the property, for a minimum distance of two hundred (200) feet. Z Z

11. Location and capacities (if applicable) of existing sewers, fire hydrants, water mains, storm drains, and power transmission lines. Z Z

12. Location, right-of-way, and pavement width of proposed streets; street lights, street signs, fire hydrants, utility and drainage easements laid out according to sound planning principles. Z Z

13. Radii of streets, points of curvature, lengths of arcs Z Z

14. Street names selected so as not to duplicate any other streets in Madison County. Z Z

15. Layout of proposed parcels of land including dimension of lot lines, lot numbers, and front, side, and rear building setback lines. Lots or parcels shall be laid out according to sound planning principles. Z Z

16. Designation an acreage of all parcels and areas to be used for non-residential purposes, including parcels reserved or dedicated for public use and utility installations. All such parcels shall be assigned parcel numbers. Z Z

17. Location of monuments and pins which shall be placed at the intersection of street center lines, changes in street direction, and the intersections and angles of the subdivision boundary. Z Z

18. Note indicating the lot number and area in square feet of the smallest lot in the subdivision. Z Z

19. Subdivision plats being submitted for commercial or industrial development shall include additional information as requested by the Planning Commission. Z Z

20. Approval from the Kentucky Division of Water and the City of Berea prior to any construction or other activity in or along a stream that could in any way obstruct flood flows. Activities include reconstruction, fill, alterations of structures, and the like. No new residential structures may be constructed in a floodway, nor shall anything be placed in a floodway that will cause any rise in base flood elevations. z z

SUPPLEMENTARY PLAT REQUIREMENTS

The following items of information shall be submitted as a supplement to the plat and considered to be a part of the plat (as

applicable).

1. A copy of the appropriate completed subdivision application form. Z Z
2. Description of physiographic characteristics to include soil types, slope, permeability rates, ground water, depth to bedrock, sinkholes, flood frequency. Z Z
3. Statement of deed restrictions and protective covenants, if any. Z Z
4. Typical street cross-sections showing roadbed construction, curbs, gutters, sidewalks, and relationship of underground utilities. Z Z
5. Plans for providing domestic water supply. The water system shall include a statement that there is an adequate water supply and pressure to support the proposed development. Z Z
6. Drainage/soil erosion control plan. The developer shall indicate (on a supplemental attachment) the plan for controlling drainage and soil erosion both during and upon completion of development. The location and specifications of such controls as silt fences, staked hay bales, detention/retention ponds, etc. shall be shown. The drainage plan shall include contours, location and size of culverts, location and specifications for detention/retention ponds and other drainage structures, and calculations of runoff estimates before and after development. The plans require certification by a local representative of the Natural Resources Conservation Service Office. Erosion control measures are to be listed on the plat/plan and mus be put in place in conjunction with initial site preparation activities. Z Z
7. Certification on the plat showing that streets and utilities have been approved by the appropriate agencies and conform to general requirements and minimum standards of design. Property fronting on a state or federal highway must receive approval from the State Highway Department for ingress and egress. Z Z
8. Certification on the plat showing that the applicant is the owner, and a statement by the owner dedicating street rights-of-way, and any other sites for public use. Z Z
9. Certification on the plat by the a professional surveyor licensed by the Commonwealth of Kentucky, as to the accuracy of the survey of plat. Z Z
10. Certification by a professional engineer licensed by the Z Z

Commonwealth of Kentucky that all improvements have been constructed as shown on the final plat. Any differences from the final plat shall be reflected on a final set of as-built drawings.		
11. Certification that the subdivider has complied with one of the following options: a. All the improvements have been installed in accordance with the requirements of these regulations, or b. A security bond, certified check, or irrevocable letter of credit has been posted with the Administrative Official in sufficient amount to assure such completion of all required improvements. The amount sufficient for completion shall be determined by the developer's engineer.	Z	Z
12. Certification on the plat by the Chairman of the Planning Commission that the plat has been approved for recording in the office of the County Clerk.	Z	Z

504 ENFORCEMENT

Chapter 100 of K.R.S. enables the Planning Commission to establish standards for local development as well as to establish the procedures necessary for implementing these standards. The statutes also include specific provisions for the enforcement of these regulations and penalties for the violation thereof as set forth in Section 305. The City shall have a cause an action for all appropriate relief, including injunctions against any governmental bodies or any person who violates this chapter or regulations adopted hereunder (K.R.S. 100.377).

505 PLATS OF RECORD

Much of the authority for regulating land subdivision comes from the necessity for recording parcels of land within the County Clerk's Office as a condition for transfer of ownership. Following approval of the final/minor plat the Codes Administrator shall return the signed plat to the developer with Planning Commission certification thereon for filing with the clerk as an official plat of record. All final/minor plats shall be recorded at the expense of the applicant in the office of the Court Clerk. When the plat is recorded, the applicant shall return the signed original to the Department of Codes and Planning. The plat being recorded shall be no more than 24 x 36 inches in size. A final/minor plat shall be recorded within one year of approval by the Planning Commission or else the approval automatically expires. The developer may request an extension of six (6) months by submitting a written request to the Planning Commission prior to the plat's expiration (K.R.S. 100.344).

506 LAND SOLD IN VIOLATION (K.R.S. 100.377)

When it has been discovered that land has been sold or transferred, or that a contract has been entered into for the sale or transfer of land in violation of the provisions of this chapter pertaining to the regulation of subdivisions, the owner or owners of record shall file plats of the land in accordance with this chapter. When land is transferred or sold, or a contact has been entered into for sale or transfer of land in violation of this chapter, the land shall be governed by the subdivision regulations both prior to and after the platting of the land by the owner of record, as if a plat had been filed in accordance with the provisions of this chapter pertaining to subdivision regulations.

507 APPEALS

Any person or entity claiming to be injured or aggrieved by final action of the Planning Commission shall appeal from the final action to the Madison Circuit Court. Such appeal shall be taken within thirty (30) days after such action. Such action shall not include the Planning Commission's recommendations made to other governmental bodies. All final actions which have not been appealed within thirty (30) days shall not be subject to judicial review.

508 DESIGN AND IMPROVEMENTS

508.1 Minimum Standards

The standards set forth in this section are authorized under K.R.S. 100.281 and are considered to be minimum acceptable standards of design for safe, efficient, and economical development within the City. Where the Planning Commission determines that excess capacity facilities are needed, as defined in the respective sections, the City may make arrangements to assist in covering the cost of that capacity required beyond what is needed to serve the immediate development.

508.2 Developer's Responsibility

Generally, the developer shall be responsible for providing the land and constructing those public improvements required to serve the development. It is also the responsibility of the developer to notify the proper governmental agency when improvements are underway so that work can be inspected to insure compliance with this ordinance. Additionally, the developer is required to notify the appropriate governmental agency when work is completed so that a final inspection can be conducted.

508.3 Site Conditions

508.31 Land Suitability

If the Planning Commission finds that land proposed to be subdivided is unsuitable for subdivision development due to flooding, poor drainage, topography, inadequate infrastructure, or other conditions which may endanger life, health, or property, the Planning Commission shall not approve the land for subdivision unless adequate methods are proposed by the developer for alleviating these unsuitable conditions.

In addition, the Planning Commission may refuse to approve what it considers to be scattered or premature subdivision of land which would involve danger or injury to the public health, safety, or welfare by reason of a lack of water supply, schools, proper drainage, adequate roads or

transportation facilities, or other public services, or which would necessitate an excessive expenditure of public funds for the supply of such facilities or services.

508.32 Natural Features

The street plan and lot layout of the proposed subdivision shall be so designed as to preserve natural features such as trees, streams, inherent characteristics of the land, and the disposition of topsoil.

508.4 Lot Development

The size, proportion, and orientation of individual parcels of land and the buildings placed on them will vary with intended type of land use and with the geologic characteristics of the land. Other principles of lot use and layout are more generally applicable and are basic to principles of good subdivision design.

508.40 Lot Area and Dimensions

Section 406.3 specifies the minimum lot area and dimensional requirements for each land use classification.

508.41 Single Building Per Lot

Each separate principal use building shall be situated on a separate and single subdivided lot of record, provided that multiple structures are permitted if a development plan providing for additional structures is approved pursuant to this ordinance.

508.5 Lot Layout

508.50 Lot Lines

All side lines of lots should be at right angles to straight streets and radial to curved streets. All lots shall front on a public street for a minimum distance of fifty (50) feet, provided, however, that this provision shall not apply to the subdivision of a single lot (i.e., one additional lot) more than one-half (½) mile beyond corporate limits; further provided that such subject lot shall have a legally enforceable and adequate ingress and egress; and further provided that the original parcel from which the subdivision is made shall not have subdivided, nor the title transferred, within the previous five (5) years. An applicant desiring to invoke this provision shall appear

before the Planning Commission and establish the above facts to the Commission's satisfaction.

508.51 Corner Lots

Corner lots shall be laid out so as to provide at least minimum front yard requirements along both street frontages. Access points to corner lots shall be a distance of at least fifty (50) feet from the intersection of streets as measured along the curb.

508.52 Double Frontage Lots

Lots shall not be laid out so that they have frontage on more than one street except for corner lots, or when the rear of the lot faces an arterial, freeway, or railroad right-of-way and the front of the lot faces on a minor street.

508.53 Topography

All parcels or lots shall be laid out in proper relationship to the topography and shall provide a building site of adequate size, that will minimize problems of drainage and soil erosion.

508.54 Land Remnants

If remnants of land exist after subdividing and have no apparent future use which can be properly controlled, they shall be incorporated into the lot pattern of the proposed subdivision.

508.55 Building Setback Line

The building setback line for development of a parcel of land shall be in accordance with the requirements of Section 406.3.

508.6 Lot Identification

508.60 Monuments

All lot/boundary corners shall be monumented as prescribed by the Kentucky State Board of Licensure for Professional Engineers and Land Surveyors Standards of Practice (Boundary Surveys 201 KAR 18:150). In addition, all street right-of-way centerlines shall be monumented at all intersections, points of curvature, and points of tangency with the same materials as specified by the above mentioned minimum standards.

In addition, a PK nail or mag nail shall be set on the street right-of-way centerlines at intersections of all lot lines extended to said centerline. The nail at the centerline could be supplemented or replaced by nails shot or driven into the concrete gutter of the curb on the lot lines extended.

508.61 Lot Numbers

All parcels of land in a subdivision, other than streets, shall be given a consecutive lot number.

508.62 Property Numbering System

Individual lots shall be given a street address by the County 911 office.

508.7 Streets

Proposed streets shall be considered in their relationship to existing and planned streets, to topography, public convenience and safety, and in relationship to proposed land uses to be served. It is desirable that consideration shall be given to other modes of transportation to include sidewalks, bikeways, and walking trails. Streets, as ways for movement of vehicular traffic, serve two principle functions: 1) the movement of people and goods, and 2) access to adjoining properties. Unfortunately, these two functions are often in conflict due to the fact that the smooth flow of vehicular traffic is interrupted by the number of access points allowed. To adequately provide for these two competing functions, sound traffic engineering principles require the use of a street classification system with several levels. Each street classification serves the two functions in varying degrees

508.70 Street Classification System

The following functional street classifications shall be considered in the planning and development of a subdivision:

1. **Arterial Streets -** primarily designed to move moderate/heavy volumes of traffic at moderate speeds local traffic to major activity centers or to state and federal highways. Example: Glades Road
2. **Collector Streets -** streets that are designed to collect traffic from local streets and channel it to local arterial streets or state/federal highways.
   Example: North Powell Ave.
3. **Frontage or Service Roads -** are roads that are designed to provide access to property adjacent to highways or major arterials, at moderate speeds. These roads

normally run parallel to the highway or arterial with access provided at established access points. Example: Clay Drive

4. **Local Streets** - primarily designed to provide access to individual lots in subdivisions, and to move small volumes of traffic at low speeds. Cul-de-sac streets are included in this classification. Example: VanWinkle Circle.

508.71 Conformance With Plan

The arrangement, location, character, width, grade, and construction of all streets shall conform to the Transportation Plan Element of the City's Comprehensive Plan, Appendix A, B, C, D and the Access Management Ordinance shall be considered in relationship to connectivity to existing and planned streets, topography, access to adjacent land, and public safety and convenience.

508.72 Street Classification Standards

Street Classification	Minimum R-O-W Width	Minimum Pavement Width	Percent Grade* Maximum	Percent Grade* Minimum
Arterial Streets	80 feet	48 feet	5%	0.5%
Collector Streets	60 feet	36 feet	8%	0.5%
Frontage/Service Roads	50 feet	28 feet	10%	0.5%
Local (Minor) Streets	50 feet	28 feet	10%	0.5%
Cul-de-sac**	50 feet	28 feet	10%	0.5%

* In addition to the grade requirements indicated above, where a subdivision street intersects with other streets/roads, a minimum area 150 feet in length with no more than a 6% slope will be provided for safety.
** The turn-around diameter for a Cul-de sac R-O-W is 100 feet, and 80 ft. diameter for the pavement, or a minimum of 75 feet from the curb turn radius. Maximum Cul de sac length is 500 feet from center of intersection to center of Cul de sac.

508.73 Responsibility for Streets

The developer shall construct all subdivision streets including all clearing, grading, laying of sub-base, base, and pavement, curbs and gutters, culverts, drain boxes, and related structures.

508.74 General Street Design Criteria

The following guidelines shall be used in the review of the subdivision layout:

1. **Horizontal Design -** Minimum radii for horizontal curves at a 25 mph design speed shall be 150 feet. Horizontal curve designs shall also take into consideration the vertical grades at each end of the curve. Steeper vertical grades, and/or higher design speeds may be reason to consider larger radii.

2. **Blocks -** The width of a residential block should accommodate two (2) tiers of lots. Block length should be at least six hundred (600) feet, not to exceed twelve hundred (1,200) feet

.

3. **Street Intersections -** Multiple intersections involving the junction of more than two (2) streets shall be avoided; street intersections shall be aligned opposite one another, otherwise offsets between intersecting streets shall be greater than one hundred twenty-five (125) feet between center lines.

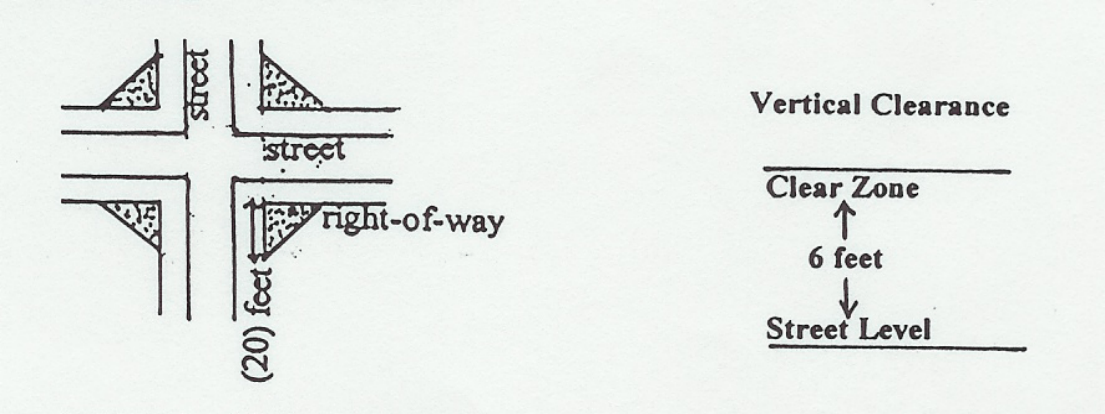

4. Intersection Sight Distance - The minimum safe sight distance at an intersection shall be determined as a straight line of unobstructed view measured in each direction across the corner between points, each along the right-of-way line twenty (20) feet from the intersection. Vision in the space so described shall not be blocked by shrubs, trees, or other obstructions, to a minimum height of six (6) feet. For further in depth instruction, see the "Access Management Ordinance".

5. **Street Names -** Street names shall be selected which will not duplicate nor be confused with names of other existing streets in Madison County. Proposed streets which are clearly in alignment with existing streets shall bear the name of that street. Generally, no street should change direction by ninety (90) degrees or more without a name change.

6. **Dedication of Right-Of-Way** - All right-of-way dedications must be in conformance with the City's Transportation Plan and the Official Map. The developer shall dedicate a minimum of fifty (50) feet as a right-of-way width for streets within the subdivision. More than one outlet shall be provided for the subdivision unless the Planning Commission makes a written finding why this requirement cannot be met. Subdivisions along existing highways or streets shall dedicate such additional right-of-way as needed to meet the standards set by the Transportation Plan. When the subdivision is located on only one side of an existing street, at least one-half of the additional right-of-way shall be provided. Notwithstanding
   the foregoing requirements, no additional dedication of right-of-way shall be required to meet such minimum standards where the developer has submitted a minor plat which fronts
   on an existing right-of-way along a street built to City designed standards. Any property
   owner who wishes to invoke this exemption shall appear before the Planning Commission
   to support the request.
7. **Dead-End Streets** - Dead-end streets, other than complete cul-de sac streets, shall be permitted only as part of a continuing street plan and only if a temporary turn-around satisfactory to the City is provided. Dedicated rights-of-way on dead-end streets shall extend to the tract boundary, and reserve strips which might be used to control access to adjacent property are prohibited
8. **Half-Streets** - Dedication of new half-streets along tract boundaries shall not be permitted except to complete the other half where a half street has been platted previously.
9. **Street Lights** - The developer shall provide street lights throughout the subdivision according to the City's accepted street light policy. Once approved, the City shall accept the monthly energy charge.
10. **Street Name Signs** - The City shall arrange for installation of street signs at all intersections. The signs shall conform to the specifications of the City and be mounted at a height of approximately seven (7) feet above the top of the curb or crown of the pavement. Street name signs shall be located on diagonally opposite corners on the far right hand side of the intersection for traffic on the more important streets.

    The initial cost of street signs shall be the responsibility of the developer.

508.75 Street Construction

Subdivision streets shall be constructed in conformance with the specification provided in Appendices A, B, and C.

508.8 Pedestrian Walkways

Sidewalks along both sides of the street are the responsibility of the developer and are to be provided along streets in all subdivisions. Sidewalks are also required in multi-family developments. All sidewalks must meet the standards required in the Americans With Disabilities Act. They shall be constructed of concrete material of at least four (4) inches in thickness except at driveways, where a minimum depth of six (6) inches with steel or fiber mesh reinforcements is required.
Sidewalks are to be constructed prior to completion of a house on the lot, and no certificate of occupancy shall be issued until the sidewalk is in place. The location of sidewalks shall be just inside the outer edge of the street right-of-way except as approved otherwise by the Planning Commission.

508.9 Driveways

508.90 Permits:

Persons desiring to install or construct driveways along existing state maintained roads are required to obtain an Encroachment Permit from the Kentucky Department of Highways prior to any construction. A copy of the permit must be submitted to the Department of Codes and Planning with any request for development along said road. A permit from the City must be obtained prior to any construction on a City street.

508.91 Approaches:

Driveways for residential areas shall be provided with a minimum width of nine (9) feet and a minimum radius at the curb of five (5) feet, or a five (5) foot flare. In areas of heavier traffic volumes or where special conditions are encountered, the Planning Commission may require an increase in driveway width and radii/flare requirements.

508.92 Culvert Pipe Requirements:

Any person desiring to construct a driveway along an existing maintained street or road that does not have curb and gutter or storm water control features other than ditches shall contact the Berea Street

Department prior to installing a culvert pipe. The culvert pipe shall meet the City's specifications and be approved by the Street Superintendent.

508.10 Storm Drainage

A drainage system shall be designed by the developer's engineer and constructed to provide for the proper drainage of surface water from the subdivision or development and drainage area of which it is a part. See Appendix D.

508.100 Drainage Report

The developer's engineer shall submit to the Department of Codes and Planning a report that provides information on the capacity of existing watercourse channels, storm sewers, culverts, and other improvements pertaining to drainage or flood control within the development, to handle the runoff which would be generated by the development itself and the additional runoff to be anticipated from the upstream drainage area, according to the land use identified in the adopted Comprehensive Plan. Post- development runoff from the site shall not exceed pre-development runoff. Additional information shall be submitted to adequately indicate that provision has been made for disposal of surface water without any damage to the land immediately downstream from the development.

This report shall also include:

a. An estimate of the quantity of storm water entering the development naturally from areas outside the site.
b. Quantities of flow at each pickup point (inlet).
c. Location, sizes, and grades of required culverts, storm drainage sewers, easements, and other required appurtenances.

508.101 Drainage Requirements

No final grading, construction, or installation of utilities shall be permitted in any proposed development until the improvement drawings and specifications have been submitted and approved by the Planning Commission's duly authorized representative. Appropriate drainage easements shall be shown on the subdivision plat.

a. **Street Grading** - A grading plan showing existing and proposed contours at two (2) foot

intervals shall be prepared for the streets along with street improvement details.

b. **Block Grading** - Block grading shall be accomplished in one or more of the following methods:

1) A ridge constructed along the rear lot lines providing for drainage into the streets;
2) Parts of all lots draining to a swale or ditch along the rear lot lines, or;
3) Draining across rear or side lot lines provided that drainage onto adjoining properties shall be controlled.

c. **Lot Grading** - Lot grading shall be accomplished as follows:
Lots shall be graded so that water drains away from each building at a minimum grade of two (2) percent. Surface drainage swales shall be a minimum grade of two (2) percent and shall be designed so that the surface water shall drain into a driveway, street gutter, storm sewer, drain inlet, or drainage way.

d. **Topsoil** - If grading results in stripping of topsoil, topsoil shall be retained on site and be uniformly spread over the lots as grading is finished. Topsoil shall not be stripped and removed from the site.

e. **Trees** - As many trees as can be reasonably utilized in the final development plan shall be retained and the grading adjusted to the existing grade of the trees where practicable. Sidewalks may be adjusted to go around significant trees in the right-of-way or yard.

f. **Design Criteria** - The design criteria for storm drainage systems are provided in Appendix D.

g. **Off-Road Drainage Systems** - The design of any off-road drainage system shall include the watershed affecting the development, and shall be extended to a watercourse or drainage way adequate to receive the storm drainage. When the drainage system is outside of the road right-of-way, the developer shall make provisions for dedication of an easement to the City to provide for future maintenance of the system. Roof and area drainpipes shall not be connected into or through the curb and gutter section of public street, but rather directly connected to a storm sewer system or discharged onto the same parcel of land from which the water is generated.

h. **Drainage Easements** - Easements for drainage purposes shall be a minimum of twenty (20) feet in width. Where the watercourse is large, easement widths shall be increased as determined by the Planning Commission. Where watercourses cross platted lots diagonally, the developer should straighten such courses where practicable and should generally follow lot lines. Easements shall be shown on the record plat and shall cover all existing or reconstructed watercourses.

i. **Conservation and Trail Easements** - Where there is a blue-line stream involved in a development project, the developer shall be required to grant a conservation and trail easement to the City of Berea for the purpose of protecting the scenic, natural, and aesthetic value of the area, and for providing limited public access by pedestrians and non-motorized

vehicles.

Silver Creek - 100 feet from centerline
Brushy Fork - 50 feet from centerline
Walnut Meadow - 50 feet from centerline
Terrill Branch - 25 feet from centerline

*These setbacks are in addition to any required building setbacks. Easements for drainage and utilities may or may not be required in addition based on the type and use as evidenced to and approved by the Planning Commission.

j. **Protection of Drainage Systems** - The banks of newly created ditches and channels shall be stabilized with adequate material to prevent erosion, particularly onto adjacent lots. Newly created ditches and open channels should be seeded, sodded, rip-rapped, paved, or use other acceptable erosion control methods depending upon grades, slopes, and soil types. Wherever practical, existing ditches and channels shall be retained in their natural state. Any erosion problems occurring on adjacent property as a result of the new development shall be corrected by the developer at his/her expense.

k. **Material Specifications and Construction Specifications**
Material and construction specifications for all drainage projects shall be designed in accordance with the requirements in Appendix B of these regulations.

508.11 Sanitary Sewer Systems

The developer shall construct a sanitary sewage collection system designed to adequately serve all lots/property in the development plus lines adequate in size to facilitate the orderly development of nearby land which is an integral part of the neighborhood service or drainage area, and connect said collection system to a centralized sewerage system. See Section 508.12 for use of on-site disposal systems.

508.110 Plans Required

The developer shall submit plans and specifications prepared by a registered professional engineer, showing the proposed sanitary sewerage system and facilities. Said plans shall show pipe sizes, gradients, type of pipe, invert elevations, location and type of manholes, the location, type and size of all lift or pumping stations, easements, and all construction details including such other information as required by the Planning Commission. If all facilities are to be in the rear of the lot, a thirty (30) foot easement may be required.

508.111 Design Standards

The proposed sewerage system shall meet the City of Berea Sewer Commission standards.

508.112 Material Specifications

Material and construction specifications including testing requirements for all sanitary sewer projects shall be in accordance with requirements of the City of Berea Sewer Commission except as herein provided.

508.113 Sewage Disposal

Except as provided for in 508.12 below, all sewage disposal in new development projects shall be by means of the City's sanitary sewer system.

508.12 Individual Sewage Disposal Systems:

Where a public sanitary sewer system is not reasonably accessible, or is not expected to be reasonably accessible to the area being subdivided within a five (5) year period, an individual on-site sewage disposal system may be installed in accordance with these regulations, and subject to the approval of the Madison County Health Department. Where the City has plans for extending a sanitary sewer system into an area that is being subdivided within a five (5) year period, capped sewers shall be installed to adequately serve all lots in the proposed subdivision.

508.13 Water Systems

It shall be the responsibility of the developer to contact the applicable water district indicating the proposed layout of the water distribution system, according to the subdivision procedures identified in these regulations. The developer shall design, construct, or have constructed, a complete water distribution system which shall serve adequately all lots/property within the proposed development, plus coordinate with the applicable water district to insure that lines are adequate in size to facilitate the orderly development of nearby land which is an integral part of the neighborhood service area. The water system shall provide water for both domestic use and fire protection.

508.130 Plans Required

The developer shall submit plans and specifications prepared by a registered professional engineer

showing the proposed water distribution system. Said plans shall show location and size of lines, type of pipe, location of hydrants, valves, and supply facilities, booster pumps, easements, elevated or ground level storage tanks (if applicable), including all construction details and other information as may be required by the Planning Commission.

508.131 Design Standards

The design criteria for the water distribution system shall be as required by the applicable water district and the applicable design criteria of the Insurance Services Office of Kentucky and the National Fire Protection Association. The design of the system shall also make provisions to insure adequate fire flow requirements, including adequate spacing for fire hydrants , size of water lines according to the type of use proposed to be served, and such other information as may be required by the Planning Commission.

508.14 Soil Erosion and Sedimentation Controls

Any developer who intends to make changes in the contours of any land proposed to be subdivided, developed, or changed in use, by grading, excavating or removing the natural topsoil, trees, or other vegetative covering thereon, shall submit a plan for erosion and sedimentation control to the Planning Commission. Such plans, if required, shall contain adequate measures for control of erosion and sedimentation where necessary, and shall show any conservation and trail easements required, using the guidelines and policies provided herein.

508.140 Requirements:

1. Two (2) sets of plans for the control of erosion and sedimentation shall be submitted to the Department of Codes and Planning as per procedures provided for in these regulations.
2. During the construction phase, technical assistance will be furnished by a representative of the Natural Resources Conservation Service. The Department of Codes and Planning shall insure compliance with these regulations.
3. The Department of Codes and Planning shall make periodic inspections of the methods used and the overall effectiveness of the erosion and sedimentation control program.

508.141 Erosion and Sedimentation Control Measures:

The following requirements shall be met to ensure that an effective erosion and sedimentation control plan is in place for the area being developed:

1. The smallest practical area of land shall be exposed to erosion at any one time during development.
2. When land is exposed during development, the exposure shall be kept to the shortest practical period of time.
3. Where necessary, after grading, temporary vegetation and/or mulching shall be used to protect areas exposed during development.
4. Sediment basins (debris basins, desilting basins, or silt traps) shall be installed and maintained where applicable until ground cover has been completed to remove sediment from run-off waters on land undergoing development
5. On-site provisions shall be made to effectively accommodate the increased run-off caused by changed soil and surface conditions during and after development with the utilization of storm sewer systems and silt checks.
6. The permanent final vegetation and structures shall be installed as soon as practical in the development.
7. The development plan shall be fitted to the topography and soils so as to create the least erosion potential.
8. Wherever feasible, existing plants should be retained and protected.
9. All erosion and sediment control measures shall conform to standards as detailed in the most current edition of the Kentucky Best Management Practices for Construction Activities and must be in place before or current with initial grading.

508.15 Electric, Telephone, and Other Improvements

Electric, telephone, cable, and other related services not described elsewhere in this ordinance shall be provided within the subdivision/development according to the specifications of the appropriate agency providing the service.

508.16 Construction Inspections

508.160 Authority and Duties of Inspectors

Inspectors shall be provided by City agencies who are authorized to inspect all work done and all materials furnished. Such inspection, including final inspection, may extend to all or any part of the work and to the preparation, fabrication, or manufacture of the materials to be used. The inspector shall not be authorized to revoke, alter, or waive any requirements of the approved improvement drawings and specifications, but is authorized to call to the attention of the contractor, any failure of the work or materials to conform to the approved improvement drawings and specifications. The contractor shall notify the pertinent inspector

at least twenty-four (24) hours prior to the time when the work is to begin on each phase of construction, such as sewer and water lines, storm sewers and street paving. The inspector shall begin inspection at the time of construction and maintain inspection as the work progresses on each phase of the project until all construction is complete. Further, and during the time of construction, any work determined by the inspector not to conform to the requirements of the approved improvement drawings and specifications shall be suspended and corrected, prior to proceeding with that phase of the project. Any question at issue which cannot be determined to conform with the approved improvement drawings and specifications shall be referred to and decided upon by the Planning Commission. Following final inspections for improvements constructed, the designer shall be required to certify in writing to the Planning Commission that improvements have been constructed in accordance with the submitted and certified as-built drawings.

508.17 Construction Responsibilities

508.170 Cooperation of Subdivider and/or Contractor

The subdivider and/or contractor shall have available on the project at all times, two (2) copies of all required plans and specifications. The subdivider and/or contractor shall cooperate with the inspector and with other contractors in every way possible. The subdivider and/or contractor shall at all times during actual construction, have a competent superintendent acting as his agent on the project. The superintendent shall be capable of reading and thoroughly understanding the plans and specifications and shall be capable of receiving instructions from the inspector. The superintendent shall have full authority to execute the orders or directions of the inspector.

508.171 Final Cleanup

Upon completion of the work, the subdivider and/or contractor shall clean up all ground occupied or affected in connection with the project. There shall be no residue or material of any kind that is not part of the finished project left on the site.

509 COMMUNITY FACILITIES AND OPEN SPACE

The process of land subdivision and development represents a long-term commitment to a particular land use . Included in the land uses are those that are deemed appropriate for community facilities. It is important that sufficient land be set aside for public purposes.

509.1 Reservation of Land

Where a proposed park, playground, school site, or other public use as indicated in the adopted Comprehensive Plan is located completely or partially within a proposed subdivision, such proposed land for public use may be dedicated to public use or conveyed to the City. If the land is not to be dedicated, it may be reserved by the Planning Commission for a period of not more than two (2) years from the date of approval of the final subdivision plat. During this time, the affected public agency may acquire the reserved property for its fair market value or by another appropriate method.

After the two (2) year period has elapsed, if the affected public agency has not acquired such land or arranged with the owner for a satisfactory extension of such period, the owner of the property may dispose of the property in conformance with these regulations and all other appropriate legal considerations.

509.2 Official Public Properties Map

If the City has adopted an Official Public Properties Map as provided for in KRS 100.317, which includes proposed public uses, then, in addition to the provisions for reservation, the Planning Commission may reject any proposed subdivision plat which does not take such proposed uses into consideration, and the City may prevent the development of such area by denying a construction permit. Unless such permit is granted, no person shall recover any damages for the taking for public use of any improvement or structure constructed within the lines shown on the Official Map. Any such new structure or improvement shall be removed at the expense of the owner when the land is acquired for public use.

510 AGREEMENTS AND GUARANTEES

The subdivider/developer may execute and file guarantees with the Planning Commission and the City in lieu of actual installation or completion of only those improvements not required as described in Section 502.55, when requesting approval of the final plat/development plan. When a subdivision is being developed in phases, each phase shall be bonded separately. Such guarantees shall be an amount for such improvements as estimated by the subdividers's engineer and approved by the Codes Administrator. The cost estimate shall be based on the amount determined to be reasonably necessary to complete all of the improvements required to be constructed by the subdivider/developer as specified in the approved improvement drawings and specifications, including appropriate plat/development plan fees and fees for field inspections, if not paid separately in a form satisfactory to the City. The guarantee shall be in the form of a commercial letter of credit, direct or general obligations of the United States government, a surety bond, or an approved escrow agreement. The guarantee shall be executed by the

subdivider/developer as principal, and if a surety bond, shall be executed by a corporation authorized to act as a surety under the laws of the state of Kentucky. The guarantee shall be an assurance of faithful performance of any and all work and the construction and installation of all improvements required to be done by the subdivider/developer as specified in the approved improvement drawings and specifications, together with all required fees. The guarantee shall contain the further condition that should the subdivider/developer fail to complete all work and improvements required to be done by him within twelve (12) consecutive calendar months of the date of approval of the final plat, or within a mutually agreed upon extension not to exceed an additional twelve(12) consecutive calendar months,

that the Planning Commission and the City may at its option, cause all required work to be completed and improvements constructed. The parties executing the guarantee shall be firmly bound for the payment of all necessary costs therefor. Whenever the subdivider/developer elects to deposit cash or general obligations of the United States government, or an approved escrow agreement, the Planning Commission and the City shall be authorized, in the event of any default on the part of the subdivider/developer in the performance of any work or construction of any improvements for which such guarantees have been deposited, to cause the required work to be done and to withdraw that amount required for payment of all costs thereof.

ARTICLE VI
DEFINITIONS

(A) For the purpose of these regulations certain words, phrases, and their derivatives are defined as follows:

(1) The words **person** or **subdivider** includes a firm, association, organization, partnership, trust, company, or corporation, as well as an individual. (2) Words used in the future tense include the present; words used in the present include the future; words used in the singular form include the plural form; words use in the plural form include the singular form; words used in the masculine form include the feminine form; words used in the feminine form include the masculine form. (3) The word **shall** denotes a mandatory requirement; the word **may** denotes a permissive requirement, and the word **should** denotes a preferred requirement.

(B) For the purposes of this Ordinance, the following definitions shall apply unless the context clearly indicates or requires a different meaning.

Access Management Refers to regulations stated in this document which promote the safe and reasonable access between public and private roads and adjacent land.

Access Point An access point is the point at which a driveway or street intersects another street.

Accessory Use or Structure A use of structure on the same lot with, and of a nature customarily incidental and subordinate to the principal use or structure.

Administrative Official (Codes Administrator) An individual appointed by the City Council to act on the Commission's behalf in carrying out the provisions of these regulations, or an individual appointed to assist the Codes Administrator and authorized to act on his/her behalf, or to perform the duties of the Code Administrator in his/her absence.

Agricultural Use Agricultural use means the use of a tract of at least (5) contiguous acres of land for production of agricultural or horticultural crops, including but not limited to livestock, livestock products, poultry, poultry products, grain, hay, pastures, soybeans, tobacco, timber, orchard fruits, vegetables, flowers or ornamental plants, and aquaculture, including provisions for dwellings for persons and their families who are engaged in the above agricultural use on the land, but not including residential building development for sale or lease to the public, and shall also

include, regardless of the size of the tract of land used, small wineries licensed under K.R.S. 243.155, and farm wineries licensed under K.R.S. 243.156. Commercial feed lots and the raising of fur-bearing animals are not considered to be normal agricultural uses. For the purpose of this chapter, a five acre or larger lot the principal use of which is for a single-family dwelling shall not be considered an agricultural use.

Alley A marginal access street which provides access to the properties which it abuts.

Alteration Any change, addition, or modification in construction or type of occupancy; any change in the structural members of a building such as walls and partitions, columns, beams or girders, the completed act of which may be referred to herein as **altered** or **reconstructed**.

As Built Drawings Final drawings/plans that accurately reflect the improvements as constructed on the ground.

Babysitting Service Facilities for the care and maintenance of three or fewer children, not related by blood or adoption, whether conducted during the daytime or overnight.

Cross reference: See definition of **Day Care Center**, below.

Basement A space having one-half or less of its floor-to-ceiling height above the average level of the adjoining ground and with a floor-to-ceiling height of not less than six and a half (6 ½) ft.

Bed and Breakfast Establishment A building occupied as a dwelling unit, but which also has guestrooms or suites which are used, rented, or hired out to be occupied or which are occupied for sleeping purposes by persons not members of the single-family unit. The building shall be further defined as either a bed-and- breakfast inn, or a bed-and-breakfast home.

Bed-and-Breakfast Home A bed-and-breakfast establishment having five (5) or fewer guestrooms or suites.

Bed-and-Breakfast Inn A bed-and-breakfast establishment having six (6) or more guestrooms or suites.

Bikeway A bikeway is a way or portion of a way intended and designed primarily for bicycle traffic.

Billboard See **Sign, Off-Premise**

Block A parcel of land within a subdivision that is bounded by streets and/or the exterior boundary of the subdivision.

Block Length The distance between intersections of through streets, such distance being measured parallel to the longest street bounding the block and from right-of-way line to right-of-way line of the two intersecting streets.

Buildable Area The portion of a building site remaining after the required front yard, rear yard, side yards, and building setback lines and buffer zones have been provided.

Buildable Lots A lot which meet all design criteria in these regulations for a lot upon which to construct a building.

Building Any covered structure, either temporary or permanent, intended for the shelter, housing, or enclosure of persons, animals, chattels, or property of any kind.

Building Height The vertical distance from established grade to the highest finished roof surface in the case of flat (or nearly flat) roofs, or to a point at the average height of roofs having a pitch of more than one foot in 4 ½ feet. Where a building is located on sloping terrain, the height may be measured from the average ground level of the grade at the building wall.

Building, Main or Principal A building in which is conducted the principal use of the lot on which it is situated.

Building Permit A written permit issued by the Administrative Official authorizing the construction, repair, alteration or addition to a building or structure.

Building Site The lot or tract of contiguous lots, which comprises the land occupied by a principal building and any accessory buildings and including open spaces, yards, and off-street parking facilities.

Carport A shelter for one or more vehicles which is not fully enclosed by its walls and one or more doors.

Cellular Antenna Tower A tower constructed for, or an existing facility that has been adapted for, the location of transmission or related equipment to be used in the provision of cellular telecommunications services or personal communications services.

Cellular Communications Services A retail telecommunications service that uses radio signals transmitted through cell sites and mobile switching stations.

Cemetery Land used or intended to be used for the burial of human or animal dead and dedicated for cemetery purposes which may include columbarium, crematory, mausoleum, and mortuary, if operated in connection with and within the boundaries of such cemetery.

Certificate of Occupancy A certificate which must be obtained prior to occupancy of any premises.

City The City of Berea, Kentucky.

City Council The legislative body of the City.

City Inspector A person employed by the City, whose responsibility it is to inspect items required by these regulations.

Clinic, Dental or Medical A building in which a group of physicians, dentists, and allied professional assistants are associated for the purpose of carrying on their professions. The clinic may include a dental or medical laboratory, but it shall not include in-patient care or operating rooms for major surgery.

Co-location Locating two (2) or more transmission antennas or related equipment on the same cellular antenna tower.

Compatibility Standards Standards that have been adopted by the City of Berea under the authority of KRS 100.348 for the purpose of protecting and preserving the monetary value of real property located within the City's jurisdiction.

Completely Enclosed Structure A building enclosed by a permanent roof and solid exterior walls pierced only by windows and customary entrance and exit doors.

Comprehensive Plan Refers to the current Berea Comprehensive Plan as authorized under KRS 100, to deal with all functions of the City over the entire incorporated area of the City.

Conditional Use A use which is essential or would promote the public health, safety, or welfare in one or more land use districts, but which would impair the integrity and character of the land use districts in which it is located, or in adjoining land use districts, unless restrictions on location, size, extent, and character or performance are imposed in addition to those imposed in the land use regulations. Such uses may be permitted in a district as conditional uses, only when specific provisions are made in accordance with these regulations.

Conditional Use Permit A permit issued by the Board of Adjustment stating that the conditional use meets all the conditions set forth in these regulations.

Construction Route Access over public ways to a construction site as restricted by the City.

Covenant A written promise of pledge placing a restriction on the use of the land. Sometimes referred

to as a Restrictive Covenant or Deed Restrictions.

Condominium The ownership of a single unit within a multiple unit structure or complex in which all common elements are held in joint ownership by the owners of the individual units. (Statutory Reference: Horizontal Property Law, KRS Chapter 381)

Culvert A drain that channels water under a street, or driveway.

Curb A concrete boundary usually marking the edge of the roadway or paved area.

Day Care Center Facilities for the day care and maintenance of four or more children or adults without living accommodations for the clientele. The definition shall include day nurseries, nursery schools, kindergartens, adult day care centers, and related facilities, but shall not include facilities providing overnight (Cross Reference: See Babysitting Service).

Detention Basin/ Pond A facility for the temporary storage of storm water runoff, designed to slow down or retard its release.

Developer Any individual, firm, association, corporation, governmental agency, or any other legal entity commencing proceedings under these regulations to carry out the development of land as defined herein, for such entity or for another; includes the term "subdivider."

Development Any man-made change to improved or unimproved real estate, including but not limited to buildings or other structures, mining, dredging, filling, excavating, grading, paving, or drilling operations. Agricultural activities such as plowing, cultivating, and gardening activities are not included in this definition.

Development Plan A development plan is a written and graphic description of a development, including any and all of the following items; location and bulk of buildings and other structures, intensity of use, density of development, streets, ways, parking facilities, signs, drainage of surface water, access points, a plan for screening or buffering, utilities, existing man-made and natural conditions, and all other conditions agreed to by the developer.

Drive-In Restaurant Any place or premises used for the sale, dispensing, or serving of food, refreshments or beverages in automobiles, including establishments where customers may serve themselves

and may eat or drink the food, refreshments, or beverages in automobiles on the premises.

Dwelling A building or part thereof used as a place of habitation under one of the following categories:

(1) **Single-Family Detached Dwelling**. A building and accessories thereto principally used, designed, or adapted for use by a single family.

(2) **Duplex Dwelling**. A building and accessories thereto principally used, designed, or adapted for use by two families, the living quarters of which are completely separate.

(3) **Townhouse**. A group of three or more attached single-family dwellings each separated by a common vertical wall and each having a separate lot and entrance at street level.

(4) **Rooming and Boarding House**. A building designed or used to provide living accommodations for not more than six occupants in which there are no separate cooking facilities for each occupant, or in which all occupants share common cooking facilities.

(5) **Multi-Family Dwelling**. A building or group of buildings designed or used for rental or lease as dwelling units for three or more families with separate living quarters and cooking and bathroom facilities for each family.

(6) **Group Home**. A dwelling unit housing persons unrelated by blood, adoption, or marriage, and operating as a single household. Group homes include sorority or fraternity houses, hospices, or orphanages, and half-way houses. (Also, refer to definition of Condominium above)

Easements A right, distinct from the ownership of the land, to cross property with facilities such as but not limited to, sewer lines, water lines, roads, and transmission lines; or the right to reserve and hold an area for drainage or access purposes.

Engineer A qualified registered professional engineer in good standing with the Kentucky Board of Registration for Professional Engineers and Land Surveyors.

Erected Built, constructed, altered, reconstructed, moved, or any physical operations on the premises which are required for construction. Excavating, filling, and similar earthwork shall be included in this definition.

Erosion and Soil Controls Measures taken to insure that soil or rock fragments are not detached, moved, or worn away from the land surface by water, wind, ice, or gravity.

Establishment The place of business of any non-residential use, whether an entire building, or an area within a building which is separated by walls and designed to be used solely by the persons who own, lease, rent, or otherwise occupy the area. When more than one non-residential use occupies the same area, it shall be deemed one establishment.

Family One or more persons occupying a single dwelling unit, provided that no such family shall contain over five persons, unless all members are related by blood, adoption, or marriage, but further provided that domestic servants employed on the premises may be housed on the premises without being counted as part of a family or families. (Statutory Reference: Residential care facility for handicapped persons allowed in residential districts and subdivisions. See KRS 100.982-100.984).

Final Plat (See Record Plat, page 109).

Flag Lot An irregularly-shaped lot which has a narrow panhandle- shaped protrusion fronting on a public street, but widening considerably some distance from the front lot line.

Flood A general and temporary condition of partial or complete inundation of normally dry land areas resulting from the overflow of inland water; the usual and rapid accumulation of runoff or surface waters from any source and mud slides which are caused or precipitated by accumulation of water on the surface or underground.

Flood, 100 Year Frequency The highest level of flooding that is likely to occur on an average of once every 100 years

Flood Plain or Flood Prone Area Any normally dry land area that is susceptible to being inundated by water from any source.

Floodway The channel of a river or other watercourse and the adjacent land area that must be reserved in order to discharge the 100 year flood without increasing the water surface elevation more than one foot at any point.

Floodway Encroachment Lines The lines marking the limits of flood ways on the official zoning map.

Frontage That side of a lot abutting on a street; the front lot line.

Garage An accessory building or a portion of the principal building used by the occupants of the premises for the shelter or storage of vehicles or other property owned or operated by the occupants of the principal building.

Grade A ground elevation established for the purpose of regulating the number of stories and the height of a building. The building grade shall be level with the ground adjacent to the walls of the building if the finished grade is level. If the ground is not entirely level, the grade shall be determined by averaging the elevation of the ground for each face of the building.

Gross Floor Area Total gross area on all floors of a building as measured to the outside surface of exterior walls, excluding crawl spaces, garages, carports, breeze-ways, attics without floors, and open porches, balconies, and terraces.

Gutter A shallow channel usually set along a curb or the pavement edge of a road for the purpose of catching and carrying off runoff water.

Historic Overlay District An area or neighborhood designated as historic by the Berea Board of Commissioners through the creation of an overlay district.

Home Occupation An accessory business use that may be permitted conditionally within a dwelling in any land use district.

Hospital An institution providing health services, both for in-patients and out-patients, and medical and surgical care of the sick and injured, which includes, as an integral part, such related facilities as laboratories, training facilities, central service facilities, staff offices, and other related functions.

Hotel A building occupied as the temporary abiding place of more than six persons, for compensation, where rooms do not contain independent cooking facilities, and which is open to transient or permanent guests, or both. The term includes motel (see page 108).

Improvement Plans The engineering plans consisting of all items to be installed as identified in these regulations, consisting of drainage systems, sanitary and storm systems, streets, sidewalks, street lighting, utilities, etc, but excluding building plans reviewed in conformance with the building code.

Inspector An individual or group of individuals representing either the legislative body, utility, or Planning Commission, whose sole duty is to inspect the construction and installation of public improvements.

Junction Box A storm water manhole that connects two or more drainage pipes. It is used where there is a change in direction, elevation, or size of the pipes.

Landmark A building, structure, historic site, or public improvement designated as historic by the Berea City Council . Property eligible to be designated as a landmark may include a brick street, cemetery, fountain, and other public or private improvements.

Loading Space An off-street space or berth on the same lot with a building or contiguous to a group of buildings, for the temporary parking of a commercial vehicle while loading or unloading merchandise or materials, and which abuts upon a street, alley, or other appropriate means of access.

Lot An area of land occupied or intended for occupancy by a use permitted in these regulations, including any principal buildings together with the accessory buildings, yard areas, and parking spaces required by these regulations, and having its principal frontage upon a publicly maintained street. (Same as a tract).

Lot Lines The lines bounding a lot as defined herein:

(1) **Front Lot Line**. The common boundary line of a lot and a street right-of-way line. In the case of a corner lot or a double frontage lot, the common boundary line of the lot and that street right-of-way line toward which the principal or usual entrance to the main building faces, or which carries the street address.

(2) **Rear Lot Line**. The boundary line of a lot which is most nearly opposite the front lot line of such lot. In the case of a triangular or wedge-shaped lot, for measurement purposes only, a line ten feet in length within the lot parallel to and at the maximum distance from the front lot line.

(3) **Side Lot Line**. Any boundary line of a lot other than a front lot line or rear lot line.

Lot of Record A lot which is part of a subdivision plat recorded in the office of the Madison County Clerk or a lot or parcel surveyed or described by metes and bounds, the description of which has been so recorded prior to adoption of these regulations.

Lot Types. Lots described in this chapter are as follows:

(1) **Corner Lot**. A lot located at the intersection of two or more streets. A lot abutting on a curved street or streets shall be considered a corner lot is straight lines drawn from the foremost points of the side lot lines to the foremost point of the lot meet at one interior angle of less than 135 degrees.

(2) **Interior Lot**. A lot with only one street frontage.

Lot Width The horizontal distance between the side lines of a lot measured at right angles to its depth along a straight line parallel to the front lot line at the minimum required building setback line.

Maintenance Agreement Maintenance acceptance follows public dedication whereby a legislative unit accepts a public improvement such as roads or utilities for maintenance.

Manufactured Home A single-family residential dwelling constructed in accordance with the National Manufactured Housing Construction and Safety Standards Act of 1974, 42 USC 5401 through 5426, as amended, manufactured after June 15, 1976, and designed to be used as a single-family dwelling with or without a permanent foundation when connected to the required utilities, and includes the plumbing, heating, air conditioning, and electrical systems contained therein. The term shall include house trailers and recreational vehicles.

Manufactured Home, Qualified A manufactured home that meets all of the following criteria; 1) manufactured on or after July 15, 2002, 2) is affixed to a permanent foundation and is connected to the required utilities and installed in compliance with KRS 227.570, 3) is at least 20 feet wide at its smallest width or is 2 stories in height and oriented on the lot with its main entrance door facing the street, 4) has a minimum total living area of 900 square feet, and 5) is not located in a manufactured home land-lease community.

Manufactured Home Park/ Community An area of land upon which manufactured homes, manufactured home space, or both, are provided for rent or lease by the owner of the land.

Manufactured An area that is subdivided into individual lots which are offered for sale for the

Home Subdivision placement of manufactured homes.

Modular Home A single-family residential dwelling constructed in accordance with the International Residential Code, without a steel chassis, and designed to be used as a permanent dwelling and placed on a permanent foundation also constructed in accordance with the International Residential Code. A modular home may consist of two or more sections constructed at a location other than its permanent location, and transported in sections to be placed on the permanent foundation at its final location. Removal of the chassis and placement of a manufactured home on a permanent foundation shall not be deemed a modular home.

Monuments Permanent man-made markers used to mark corners of property boundaries or points of change in street alignment. Monuments must conform to the minimum standards of practice for land surveying in the Commonwealth of Kentucky.

Motel (See Hotel, page 106).

Multi-Tenant Commercial Development A development containing two or more non-residential uses on the same building site such as shopping centers, shopping malls, or office complexes.

Net Floor Area The total area of all floors of a structure as measured to the outside of exterior walls, but excluding rooms in non-residential structures designated as and used exclusively for storage, mechanical or janitorial rooms, uninhabitable areas, or rooms which when occupied would result in a vacancy elsewhere in the structure, such as restrooms, dressing rooms, locker rooms, and employee cafeterias. Areas not to be excluded are hallways, corridors, vestibules, lobbies, or other space occupied by partition walls, furniture, fixtures, appliances or machinery.

Non-Conforming Use or Structure An activity or a building, sign, sign structure or a portion thereof which lawfully existed at the time of adoption of these regulations but which does not conform to all of the regulations contained in this chapter which pertain to the district in which it is located. (Cross Reference: Non-conforming Uses or Structures, 405). (Statutory Reference: Non-conforming use, KRS 100.253).

Nursing Home, Any institution, however named, maintained for the care or treatment of four or more

Intermediate and Skilled Care individuals unrelated to the owner or operator or their spouses, which employs nursing services or procedures in the care of such residents that require treatment, judgment, technical knowledge, and skills beyond those possessed by the untrained person.

Nursing Home, Personal Care Any institution, however named, maintained for the care or treatment of four or more ambulatory individuals unrelated to the owner or operator or their spouses, who require supervision, not nursing care.

Official Map The adopted official map of the City of Berea as provided for in KRS 100.

Open Space An area open to the sky which may be on the same lot with a building. The area may include along with the natural environmental features, swimming pools, tennis courts, and other recreational facilities that the Planning Commission deems permissive. Structures of any kind shall not be included.

Parcel This term is synonymous with **Lot** (see page 107)**.**

Plat A drawing of a proposed lot(s) or parcel(s) of land prepared by a licensed professional to an appropriate scale as required in these regulations.

Plat, Preliminary A drawing of a proposed subdivision by a licensed professional that is part of the major subdivision procedure containing detailed surveying and engineering information as required in these regulations.

Plat, **Record** A drawing of a proposed subdivision by a licensed professional as required in these regulations which will be recorded in the County Clerk's office. Sometimes referred to as the **Final Plat** (p. 104)**.**

Public Dedication Public dedication involves a property owner voluntarily transferring land for public uses (streets, utilities, open space). Public dedication does not imply acceptance by the Berea City Council for public maintenance.

Public Improvement Any physical improvement that will become the responsibility of the City of Berea for maintenance purposes upon completion of construction, dedicated and acceptance. This

includes streets and utilities.

Public Facility Any use of land whether publicly or privately owned for transportation, utilities, or communications, for the benefit of the general public, including but not limited to libraries, schools, streets, fire or police stations, City and county buildings, recreational centers and parks, and cemeteries.

Public Utility Any person, firm, corporation, partnership, municipal or county board, department, or Commission that owns, controls, operates, or manages any facility for the production, transmission, or distribution of electriCity, natural or manufactured gas, steam, water, telephone or telegraph messages, cable television signals, or the treatment of sewage for disposal.

Residential Care Facility A residence operated and maintained by a sponsoring private or governmental agency to provide services in a homelike setting for persons with disabilities.

Resubdivision A subdivision which is actually a further division of a previously recorded plat, representing a revision of the old lots, but where no new improvements are to constructed or extended.

Retention Basin A pond, pool, or basin used for the permanent storage of water runoff. Unlike detention basins, retention basins have the potential for water recreation and water-oriented landscaping since water remains in the structure.

Right-of-Way A term denoting land, property, or interest therein usually acquired by dedication, prescription, or condemnation, and intended to be used for a street, sidewalk, railroad, or some similar use. In the case of a street right-of-way, this strip of land includes the roadway itself and additional land for ditches, sidewalks, utilities, and future expansion of the roadway.

Setback Line A line established by these regulations generally parallel with and measured from the lot line, defining the minimum limits of a yard, in which no building other than an accessory building may be located.

Self-Service Storage Facilities A structure containing separate, individual, and private storage spaces of varying sizes leased or rented on individual leases for varying periods of time.

Semi-Public Uses that are quasi-public, to include churches, parochial schools, colleges, hospitals, and other facilities of an educational, religious, charitable, philanthropic, or non-profit nature.

Sidewalk A paved area paralleling and usually separated from the street which is used as a pedestrian walkway.

Sign A sign is defined as any object, device, display, or structure or part thereof, situated outdoors or indoors, which is used to advertise, identify, display, direct, or attract attention to an object, person, institution, organization, business, product, service, event, or location by any means, including words, letters, figures, design, symbols, fixtures, colors, illumination, or projected images.

Sign, - Animated or Moving Any sign or part of a sign that changes physical position or light intensity by any movement or rotation or that gives the visual impression of such movement or rotation.

Sign - Awning, Canopy or Marquee A sign that is mounted, painted, or attached to an awning, canopy, or marquee that is otherwise permitted by ordinance.

Sign Area The entire face of a sign, including the advertising surface and any framing, trim, or molding, but not including the supporting structure.

Sign, billboard: (See **Sign, Off-Premise** see page 118)

Sign, Bulletin Board: A sign that identifies an institution or organization on the premises of which it is located and connected that contains the name of the institution or organization, the names of individuals with it, and general announcements of events or activities occurring at the institution or similar messages.

Sign, Construction: A temporary sign erected on the premises on which construction is taking place, during the period of such construction, indicating the names of the businesses/ contractors that have a role or interest in the project.

Sign, Directional: Signs limited to directional messages, principally for pedestrian or vehicular traffic such as “one-way,” “entrance,” “exit,” etc.

Sign, Facade/Wall: A sign fastened to or painted on the wall of a building or structure in such a manner that the wall becomes the supporting structure for, or forms the background surface of,

the sign and that does not project more than twelve (12) inches from such building or structure.

Sign, Face/Area The area or display surface of a sign used for the message.

Sign, Flashing Any directly or indirectly illuminated sign that exhibits changing natural or artificial light or color effects by any means whatsoever.

Sign, Freestanding Any non-movable sign not affixed to a building.

Sign, Governmental A sign erected and maintained pursuant to and in discharge of any governmental functions or required by law, ordinance, or other governmental regulation.

Sign, Ground Any sign in which the entire bottom is in contact with or is close to the ground and is independent of any other structure.

Sign, Home Occupation A sign containing only the name and occupation of a permitted home occupation

Sign, Identification A sign giving the nature, logo, trademark, or other identifying symbol; address; or any combination of the name, symbol, and address of a building, business, development, or establishment on the premises where it is located.

Sign Illuminated A sign lighted by or exposed to artificial lighting either by lights on or inside the sign, or directed toward the sign.

Sign, Off-Premises A sign that directs attention to a business, commodity, service, or entertainment conducted, sold, or offered at a location other than the premises on which the sign is located. An example is a billboard.

Sign, Pole A sign that is mounted on a free-standing pole or other support so that the bottom edge of the sign face is six feet or more above grade.

Sign, Portable A sign that is not permanent, affixed to a building, structure, or the ground.

Sign, Projecting A sign that is wholly or partly dependent upon a building for support and that projects more than twelve inches from such building.

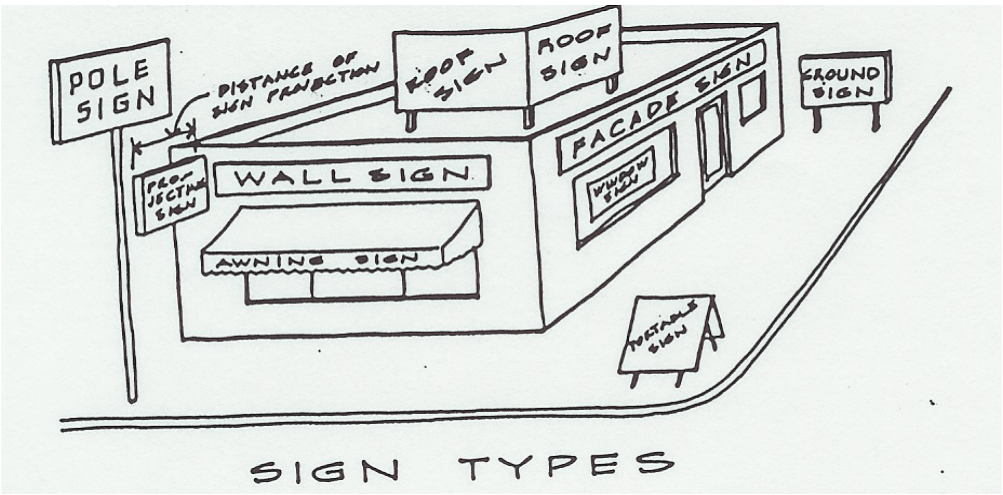

Sign, Roof A sign that is mounted on the roof of a building or that is wholly dependent upon a building for support and that projects above the top walk or edge of a building with a flat roof, the eave line of a building with a gambrel, gable, or hip roof, or the deck line (level portion) of a building with a mansard roof.

Sign, Temporary A sign or advertising display constructed of cloth, canvas, fabric, plywood, or other light material and designed or intended to be displayed for a short period of time.

Sign, Vehicle A sign on a vehicle not customarily and regularly used to transport persons or property but used primarily for business purposes.

Story That portion of a building included between the surface of any floor and the surface of the floor next above it, or if there is no floor above it, the space between such floor and the ceiling next above it. A basement shall not be considered a story.

Street A street is an area of land dedicated for public use in order to provide for vehicular and pedestrian movement. The right-of-way limits for a street may provide for other uses (see **Right-of-Way**). Streets are classified as follows:

Arterial Arterial streets provide the linkage between expressways and collector streets and

generally rank next to expressways in traffic volume, speed limit control, and right-of-way limits. The primary function of an arterial street is to move vehicles from one area to another.

Collectors Collector streets are used primarily for vehicular movement and secondarily for access control.

Courts Court streets are short and have an outlet at only one end.

Expressway A divided arterial highway for through traffic with full or partial control or access and generally with grade separations.

Local Streets Local streets are primarily used to provide access to properties abutting the minor street and to discourage through traffic.

There are four types:

1. **Continuing Streets -** These streets have two open ends, with each end generally connecting with different streets. One or more other streets may intersect such a street between its two open ends.
2. **Cul-de-Sacs -** These streets have only one open end which provides access to another street and a closed end with a turn-around adequate for service vehicles.
3. **Loop Streets -** These streets have two open ends and both ends generally connect with the same street.
4. **Service Street -** A street running parallel to an expressway or arterial and serving abutting properties. Sometimes called a frontage roads.

Sub-Collectors Sub-collector streets are primarily used for vehicular movement and link collector streets with minor streets.

Street, Private A street that is not publicly maintained but privately maintained by owners of property abutting the street. Private streets have a minimum of crushed aggregate or a dust free durable surface such as asphalt, concrete, or tar and chip, which affords access to adjoining property for private use of such property, and may or may not meet current standards.

Street, Public A public roadway constructed within a dedicated public right-of-way which affords the principal means of access to adjoining property . For the purpose of density calculations,

a public street shall constitute all of the area within the public right-of-way. A public street is constructed to meet current standards.

Street Frontage The linear width of any lot or building site where it adjoins a street or public way (See Frontage page 103, and Lot Width page 106).

Structure Anything constructed or erected, the use of which requires a fixed location on the ground, or attachment to something having a fixed location on the ground, including buildings, radio/telecommunications towers, swimming pools, signs, and includes earthen berms, excavations, or embankments.

Subdivider Any individual, firm, association, syndicate, partnership, trust, corporation, governmental agency, or other legal entity as mentioned in these regulations so as to create a subdivision of land.

Subdivision The division of land into two or more parcels for the purpose, whether immediate or future, or sale, or lease, or building development, or if a new street is involved, any division of a parcel of land, providing that a division of land for agricultural purposes into lots or parcels of five acres or more, and not involving a new street, shall not be deemed a subdivision if and only if a covenant appears in the deed of the new tract to the effect that the subdivision is principally for agricultural use, that residential use is incidental and that no further development shall be made of the property unless submitted to and approved by the Planning Commission. The inclusion of building restrictions on a plat shall be presumptive evidence that the division is not for agricultural purposes. The term includes resubdivision and when appropriate to the context, shall relate to the process of subdivision or to the land subdivided.

Tenant Space The area within a multi-tenant commercial development or multi-family residential development which is separated by walls and designed to be used solely by the persons who lease, rent, or otherwise occupy the area. When two or more persons lease the same common area, it shall be deemed as one tenant space.

Tract A parcel or lot identified by letter or number the boundaries of which are shown on a recorded plat or in a deed.

Uninhabitable Areas Areas of a structure not designed or used for human occupancy, such as walk-in coolers, crawl spaces, attic spaces, or garages.

Uniform Application An application for a certificate of convenience and necessity issued under KRS 278.020 submitted by a utility to the Public Service Commission to construct an antenna tower for cellular telecommunications services or personal communications service in a jurisdiction that has adopted planning & land use regulations in accordance with KRS Chapter 100.

Use The purpose or activity for which a building, structure, or land is occupied or maintained.

Variance A departure from dimensional terms of this Ordinance pertaining to the height, width, or location of structures, and the size of yards and open spaces where such departure meets the requirements of K.R.S. 100.241 to 100.247.

Waiver Permission granted by the Planning Commission to waive or eliminate, upon written request from a subdivider, any requirement or standard in these regulations, when the applicant has presented written justification or data that the intent of these regulations can be met while waiving the requirement.

Walking Trail An improved trail or pathway that is designed to be used by pedestrians only.

Watercourse A natural or man-made channel through which water flows. Drainage from lots and small minor swales are not considered to be watercourses.

Yard A required open space unoccupied and unobstructed by any structure or portion of any structure, except as otherwise permitted.

(1) **Front Yard**. An open space extending the full width of the lot, the depth of which is the minimum horizontal distance between the front lot line and the nearest point of the main building.

(2) **Rear Yard**. An open space extending the full width of the lot, the depth of which is the minimum horizontal distance between the rear lot line and the nearest point of the main building.

(3) **Side Yard**. An open space between a main building and the side lot line, extending from the front yard to the rear yard, the width of which is the horizontal distance from the nearest point of the side lot to the nearest point of the main building.

Yard, Required The minimum open space as specified in these regulations for front, side, and rear yards.

APPENDIX A

CEMENT CONCRETE FOR STREET, CURB & GUTTER, SIDEWALK & DRIVEWAY CONSTRUCTION

CEMENT CONCRETE FOR STREET, CURB & GUTTER, SIDEWALK & DRIVEWAY CONSTRUCTION

The work covered by these specifications consists of furnishing all labor, equipment and materials and in performing all operations in connection with the construction of airentrained Portland Cement concrete pavement for streets and alleys in accordance with these specifications and the applicable drawings. The cement concrete pavement work shall consist of a single course of cement concrete, including reinforcement and longitudinal and transverse joints, when required, constructed on a prepared subgrade or insulation course in conformity with the lines, grades, and cross sections shown on the plans.

ITEM 1.0 GRADING: This term shall consist of all grading above or below subgrade elevations, of whatever nature, required to bring the street to the proper subgrade elevation, including necessary excavation for curb, gutter, sidewalk, construction of embankments, excavation and proper sloping of all cuts, and other work incidental thereto.

A. EXCAVATIONS: All excavations shall be made to approximate subgrade elevations and shall be true to grade. No excavation shall be made below subgrade elevation except to remove a spongy material, vegetation matter, or other material as ordered or approved by the inspector.

B. EXCAVATION BELOW SUBGRADE: Whenever excavation below subgrade elevation to remove spongy material, vegetation matter, or other material is required, the contractor shall remove same in a satisfactory manner, and shall replace it with satisfactory material in layers not to exceed twelve (12) inches in thickness and shall thoroughly compact each layer before the next layer is placed.

C. CONSTRUCTION OF EMBANKMENTS: All topsoil and heavy root system shall be removed to eliminate all vegetation from the area upon which embankment is to be constructed. Soil so removed shall not be construction of embankment. Embankment shall be constructed, of approved materials, to approximate subgrade elevation in layers to not exceed eight (8) inches in thickness and extending the full width of the embankment. Each layer shall be compacted to not less ninety-five (95) percent of the density determined from the “Standard Test for Moisture-Density Relationship” (AASHO Designation T-99) in areas involving structures and public improvements including slopes greater than 3:1.

D. SUBGRADE: The subgrade is defined as the top one (1) foot of the soil profile at finished grade prior to placing the pavement. This top one (1) foot of soil will consist of: (a) compacted fill placed for embankments as outlined in item C; (b) undisturbed soils in the transitional areas from cut to fill immediately below the topsoil; (c) undisturbed soils at depths greater than three (3) feet below the original ground surface in cut areas. The top one (1) foot of subgrade shall be compacted to ninety-eight (98) percent of maximum density as determined by the Standard Proctor Moisture Density Test (ASTM D698-78 or AASHO T-99) or ninety (90) percent of maximum density as determined by the modified Proctor moisture-density test (ASTM DI 557-78 or AASHO T-180) within two (2) percent of optimum moisture content on the dry side of the curve or four (4) percent of optimum moisture content on the wet side of the curve immediately proper to placing the pavement. In transitional areas from cut to fill, the soils have been subject to seasonal changes of freezing and thawing and wetting and drying. These soils will exist on the order of 60 to 80 percent of maximum density (ASTM D698-78).These soils shall be scarified, aerated and dried in order to obtain the specified percent compaction for subgrade Soils in cut areas, three (3) feet below original grade, will exist at moisture content and at densities on the order of ninety (90) percent of maximum density (ASTM D698-78). These soils shall be scarified, aerated, and dried in order to obtain the specified percent compaction for subgrade.

Any soft or yielding areas, resulting from high moisture content that are encountered at the time of construction shall be scarified, aerated, and dried to reduce the moisture content nearer to optimum moisture content, then recompacted to the specified density. The subgrade shall be shaped to plan elevation and cross section. Immediately prior to placing the concrete, the subgrade shall be checked for conformity with the cross section shown on the plans by means of an approved template on the side forms. If necessary, the materials shall be removed or added as required to bring all portions of the subgrade to correct elevations. The subgrade shall be thoroughly compacted and again checked with the template. Concrete shall not be placed on any part of the subgrade, which has not been checked for correct elevation. The subgrade shall be clean of loose or wet material prior to placing concrete.

Prior to placing the concrete the Contractor shall proof roll the compacted subgrade with a fully loaded single axle truck. The inspector shall observe the proof rolling for consistency. Areas, which are subject to excessive pumping or rutting, shall be reworked

and recompacted as described above. All subgrade testing shall be made not more than 48 hours prior to placement of pavement, unless extreme weather conditions dictate retesting (rain, freezing temperature, excessive temperature, etc.) The appropriate inspector shall be contacted not less than Twelve (12) hours prior to placement of materials.

E. EQUIPMENT FOR COMPACTION OF EMBANKMENT AND SUBGRADE:

Any compaction equipment capable of uniformly producing the required embankment and subgrade densities, without lamination of, or within, successive layers, will be permitted. All compaction equipment shall be in good condition and shall be operated efficiently to assure uniform compaction.

F. SUBGRADE FOR CURBS, GUTTERS, SIDEWALKS AND DRIVEWAYS:

Subgrade areas to be occupied by curbs, gutters, sidewalks, and driveways shall be excavated, backfilled, as required, and compacted to establish grade. This work shall be done with particular care in accordance with all requirements herein.

G. EQUIPMENT OPERATED ON THE STREETS: The contractor shall be permitted to operate only pneumatic-tired equipment over any paved street surfaces and shall be responsible for correction of any damage to street surfaces in any manner resulting from the contractor's operations.

H. PROTECTION OF UTILITY LINES: The contractor shall at all times take proper precautions for the protection of utility lines, the presence of which are known, or can be determined by the examination of appropriate maps of applicable agencies.

ITEM 2.0 MATERIALS: Concrete shall be composed of Portland Cement, air-entraining agent, aggregates and water.

A. PORTLAND CEMENT: Cement of the type specified shall conform to requirements of the current ASTM specifications for Portland Cement Type I or Type III (Designation C-150). Cement which for any reason has become partially set or which contains lumps of caked cement shall be rejected. Either packaged or bulk cement may be used.

B. AIR-ENTRAINING AGENT: Air-entraining agents shall conform to the requirements of the current ASTM Specifications for Air-entraining agents for concrete (Designation C-260)

C. CHEMICAL ADMIXTURES FOR CONCRETE: Admixture of the type specified shall conform to requirements of the current ASTM Specifications for Admixtures of Type A and Type D (Designation C-494).

D. AGGREGATES: All aggregates for concrete shall meet the current standard requirements for concrete pavements of the Kentucky Department of Transportation, Bureau of Highways, or the current ASTM Specification for concrete aggregates (Designation C-33). Aggregates shall be so handled that moisture content and gradation are reasonably uniform and do not change appreciably from batch to batch or hour to hour. No aggregates shall be used which have become contaminated or intermixed. Frozen aggregates or aggregates containing frozen lumps shall be thawed before use.

E. WATER: Water used in mixing or curing concrete shall be clean and free from injurious amounts of oil, acids, salt, alkali, or organic materials or other substances harmful to concrete. Normally water from public supplies or which is suitable for drinking is always satisfactory.

F. REINFORCING STEEL: Reinforcing steel, if specified, shall conform to current Standard Specifications of the Kentucky Department of Transportation, Bureau of Highways.

G. Joints:

1. **EXPANSION JOINTS:** Expansion joints shall be non-extruding performed joint fillers and shall conform to current Standard Specifications fo the Kentucky Department of Transportation. The selection of the type will be at the contractor's option.

2. **JOINT SEALING COMPOUND:** Sealing material for filling all types of pavement joints shall comply with current Standard Specifications fo the Kentucky Department of Transportation. Sealing material shall be Hot Pour Rubber-Asphalt Sealer (SEALTIGHT # 161T) or approved equal.

3. **PREMOLDED JOINT MATERIAL:** Premolded parting strips, when called for on the

plans, shall be at least 1/8 inch thick and of width shown on the plans. They shall consist of strips which have been formed from layers of felt or shredded felt, cane, wood, or other suitable fibers, securely bound and uniformly impregnated with a suitable binder. They shall be of such character that they will not be permanently deformed by ordinary handling during hot weather or become hard and brittle in cold weather.

H. CURING:

1. **BURLAP OR COTTON MATS:** Burlap or cotton mats shall at time of using, be in good condition, free from holes, dirt, clay or any other substance which would have a deleterious effect upon concrete. Burlap or cotton maps shall be of quality specified by AASHO (Designation M-182 and M-73, respectively).

____2. **WATERPROOF PAPER OR PLASTIC SHEETS:** Waterproof paper or plastic sheets for curing concrete shall conform to the -for current ASTM or AASHO specifications for waterproof paper curing concrete, C-171 and M-139, respectively. Moisture retention shall conform to the requirements of ASTM (Designation C-156).

3. **MEMBRANE CURING COMPOUND:** Membrane curing compounds shall be the white pigmented type and conform to the requirements for the current AASHO Standard Specifications for Liquid Membrane Forming compounds for curing concrete (Designation M-118 or ASTM Designation C-309).

ITEM 3.0 BATCHING: Measurement and batching of cement, fine and coarse aggregates shall be by weight. Scales in use shall be accurate when static load tested to +0.4 percent of the total capaCity of the scale. One sack of cement shall be considered to weigh ninety-four (94) pounds net. Bulk and cement from fractional sacks shall be weighed.

A. **STRENGTH OF CONCRETE:** The concrete shall attain a minimum expected strength of concrete at 28 days of 3,500 pounds per square inch compressive strength and/or 550 pounds per square inch flexural strength “modulus of rupture”. Concrete specimens to check the adequacy of the delivered concrete for strength shall be made and cured in accordance with ASTM C-31, making and curing concrete compressive and flexural test specimens in the field, when requested by the inspector. Compressive strength

specimens shall be tested in accordance with ASTM C-39, and flexural strength determination shall be in accordance with ASTM C-78.

B. PROPORTIONING CONCRETE: It shall contain not less than five-and- one-half sacks of cement (ninety-four (94)lb per sack)per cubic yard of concrete and a maximum of five and one-half (5-½) gallons of water per sack of cement, including surface water contained in the aggregates. The proper portions of cement, water, and aggregates shall be determined in accordance with ACI Standard 613, "Recommended Practice for

Selecting Proportions for Concrete", or the Portland Cement Association Booklet, "Design and Control of Concrete Mixers."

C. The entrained air shall be obtained by using air-entraining agent. All concrete shall be air-entrained in accordance with the following:

MAXIMUM SIZE OF AIR CONTENT

AGGREGATE (INCHES)	PERCENT BY VOLUME
1-1/2. 2-1/2	5 + 1%
3/4, 1	6 + 1%
3/8, ½	7-11-F + 1%

D. CONSISTENCY: The slump of the concrete shall not exceed five (5) inches when hand finishing techniques are employed, and shall not exceed three (3) inches when a mechanical finishing machine is used. The consistency shall be measured as described in the current ASTM Standard Method of Slump Test for Consistency of Portland Cement Concrete (Designation C143) or the Method Test for Ball Penetration for Portland Cement Concrete, ASTM (Designation C-360).

E. READY-MIXED CONCRETE: All ready-mixed concrete shall be furnished in accordance with the current ASTM specifications for ready-mixed concrete (Designation C-94). Any concrete, which is not plastic and workable when it reaches the subgrade, shall be rejected. When construction conditions are such that it is absolutely necessary for

trucks hauling concrete to operate on the grade between forms, they shall not back over previously deposited fresh concrete.

1. **TIME OF DELIVERY:** Concrete shall be delivered and discharged from a truck mixer or agitator truck within a period of one and one-half (1 ½) hours at air temperatures up to eighty-five (85°) degrees Fahrenheit and one (1) hour at air temperatures higher than eighty-five (85°) degrees Fahrenheit after introduction of the water to the cement and aggregates or of the cement to the aggregates. Delivery tickets shall have this time clearly shown thereon, and the inspector shall check the same to be certain that delivery is made within the period specified.

2. **TYPE OF DELIVERY EQUIPMENT:** Concrete shall be delivered in truck mixers or agitator truck (trucks providing mechanical agitation by revolving drums or revolving blades in a stationary drum) operated after time required for thorough mixing of the concrete at the speed designated by the manufacturer as agitating speed.

F. **JOB-MIXED CONCRETE:** Job-mixed concrete shall be mixed in a drum mixer which shall conform to the concrete paving mixer standards of the Mixer Manufacturers Bureau of the Association General Contractors of America. The mixer shall be capable of combining the aggregates, cement and water into a thoroughly mixed and uniform mass within the specified time and of discharging the material without segregation.

The entire contents of the drum shall be discharged before recharging. The volume of the mixed materials per batch shall not exceed the manufacturer's guaranteed capaCity of the mixer.

G. **TIME OF MIXING:** The mixing of each batch shall continue for not less than one minute after all materials, except water, are in the mixer. The mixer shall rotate at the rate recommended by its manufacturer. The mixer shall be provided with a batch-timing device that shall be subject to inspection and adjustment by the inspector.

H. **RETEMPERING OF CONCRETE:** Retempering of concrete, which has partially hardened, by remixing, with or without water, shall not be permitted.

ITEM 4.0 MEASURING AIR CONTENT: The air content shall be measured in accordance with

ASTM Method of Test for Air Content of Freshly Mixed Concrete by the Pressure Method (Designation C-231) or ASTM Method of Test for Air Content of Freshly Mixed Concrete by the Volumetric Method (Designation C-173).

ITEM 5.0 FORMS: Forms may be made of wood or metal and shall have a depth equal to or greater than the prescribed edge of thickness of the pavement. Each section of form shall be straight, free from bends or warps. The method of connections between the form sections shall be such that the joint thus formed is tight and free from movement in any direction. Forms shall be of such cross sections and strength and so secured as to resist tile pressure of the concrete when placed and the impact and vibration of any equipment which they support without springing or settlement.

A. SETTING FORMS: The subgrade under the forms shall be compacted and shaped so that the form when set shall provide the specified elevation. The supply of forms shall be sufficient to permit their remaining in place for sufficient time so when removed the concrete will not be displaced. All forms shall be cleaned and oiled each time they are used.

B. GRADE AND ALIGNMENT: The contractor immediately ahead of concrete placement shall check the alignment and grade elevation of the forms and necessary corrections will be made. Any forms that have been disturbed or subgrade that has become unstable shall be corrected and forms reset and rechecked. Any variations in grade and alignment shall be subject to approval by the inspector, prior to placing the concrete. When slip-form paving machines are used, form work shall be as required by manufacturer.

ITEM 6.0 PLACING CONCRETE: The concrete shall be mixed in quantities required for immediate use and shall be deposited on the subgrade to the required depth and width of the construction lane in successive batches and in a continuous operation without the use of intermediate forms or bulkheads. The concrete shall be placed as uniformly as possible in order to minimize the amount of additional spreading necessary. While being placed, the concrete shall be vibrated and compacted with suitable tools so that the formation of voids or honeycomb pockets is prevented. No concrete shall be placed around manholes or other structures until they have been brought to the required grade and alignment. Additional tamping and compaction will be required after raising manholes.

A. COLD WEATHER CONCRETING: Concrete may be placed when the air temperature in the shade and away from artificial heat is more than thirty-five (35B) degrees Fahrenheit and rising. Concrete shall not be placed when the air temperature in the shade and away from

artificial heat is less than forty (40B) degrees Fahrenheit and falling.

B. HOT WEATHER CONCRETING: Except by written authorization, concrete placing shall cease if the temperature of the plastic concrete cannot be maintained at ninety (90B) degrees Fahrenheit or lower. To facilitate the placement of concrete in hot weather, a retarding chemical admixture Type A or D, in conformance with ASTM C-494, may be used.

ITEM 7.0 CONSOLIDATING AND FINISHING: The pavement shall be struck off and consolidated with a mechanical finishing machine or by hand-finishing methods. When a mechanical finishing machine is used, the concrete shall be struck of at such a height that after consolidation and final finishing, it shall be at the elevation as shown on the plans. The finishing machine shall be provided with a screed that will consolidate the concrete by pressure, vibration or both. The concrete shall be brought to a true and even surface, free from rock pockets. The edge of the screeds along tile curb line may be notched out to allow for sufficient concrete to form tile integral curb. Hand - finishing tools shall be kept available for use in case the finishing machine breaks down. When had finishing is used, the pavement shall be struck off and consolidated by a vibrating screed to the elevation as shown on the plans. When the forward motion of the vibrating screed is stopped, the vibrator shall be shut off; it shall not be allowed to idle on the concrete.

A. SCRAPING AND STRAIGHT EDGING: The pavement may be required, by the inspector, where applicable, to be scraped with a straightedge equipped with handles long enough to permit it to be operated from the edge of the pavement, in accordance with Kentucky Department of Transportation specifications. When irregularities are discovered, they shall be corrected by adding or removing concrete. All disturbed places shall be floated with a wooden or metal float not less than three (3) feet long and not less than six (6) inches wide and again straightedged.

B. EDGING: Before final finishing is completed and before the concrete has taken its initial set, the edges of the slab and curb shall be carefully finished with an edger, having a radius of 1/3 inch.

C. FINAL SURFACE FINISH: A burlap drag or broom finish shall be used as the final finishing method for concrete pavement. The drag shall be at least three (3) feet in which and along enough to cover the entire pavement width. It shall be laid on the surface of the pavement and dragged forward in the direction in which the pavement is being laid. The curb shall have the same final finish as the pavement. The final surface of the concrete pavement and curb shall

have a uniform gritty texture, free from excessive harshness and true to the grades and cross sections shown on the plans. The inspector may require changes in the final finishing procedures as required to produce the desired final surface texture.

ITEM 8.0 INTEGRAL CURB: When integral vertical curbs are used along the edges of all street pavement, depressed curbs shall be provided at all driveway entrances and at such other locations as designated by the approved plans. The integral curb shall be constructed with or immediately following the finished operation. Special care shall be taken so that the curb construction does not lag the pavement construction and form a "cold joint" in placing curb concrete, sufficient spading shall be done to secure adequate bond with paving a slab and eliminate all voids in the curb. Curbs shall be formed to the cross section in accordance with Appendix "C".

ITEM 9.0 CURING: Concrete shall be cured by protecting it against loss of moisture, rapid, temperature change, from rain, flowing water and mechanical injury for a period of not less than seven (7) days from the beginning of the curing operation. Moist curing, waterproof paper, white pigmented liquid membrane compound, or a combination thereof, may be used for curing. Immediately after finishing operations have been completed, the entire surface of the newly laid concrete shall be covered by the curing medium, which is applicable to local conditions and approved by the inspector.

The edge of the concrete slabs exposed by the removal of forms shall be protected immediately to provide these surfaces with continuous curing treatment equal to the method selected for curing a slab surface and to prevent injury to concrete edges.

The covering material shall be kept free of any substances, which may be detrimental to the surface of the concrete. The initial curing medium shall be effective and shall be applied so as to prevent checking, cracking and the appearance of dry spots in the surface of the concrete. The contractor shall have the equipment needed for adequate curing at hand and ready to install before actual concrete placement begins. In all cases in which the curing medium requires the use of water, the curing shall have prior right to all water supply. Failure to provide sufficient cover material of the type selected, failure to maintain saturation for the entire curing period in the moist-curing methods, lack of water to adequately care for both curing and other requirements or other failures to comply with curing requirements shall be cause for immediate suspension of concreting operations.

A. MOIST CURING: Moist curing shall be accomplished by covering of burlap, cotton mats or other approved fabric mat used singly or in combination. Curing mats shall be thoroughly wet when applied and kept continuously wet and in intimate contact with the pavement surface for the duration of the moist curing period. Other fabric mats shall conform in design and shall provide a curing medium at least equal to cotton mats. Cotton mats, other fabric mats, and burlap mats and burlap strips shall be furnished in the widths and lengths, after shrinkage, required to cover the entire width and edges of the pavement lane.

Mats or burlap shall be lapped at joints between adjacent sheets to prevent drying of this location. Moist curing, when used as initial curing, shall be continued for not less than 24 hours. Type and weight of cotton mats for curing concrete shall conform to ASTM C-440 or AASHO M-73. Burlap strips shall conform to AASHO M-182.

B. WATERPROOF PAPER AND POLYTHENE SETTING CURING: The surface of the concrete shall be wetted with a fine spray of water and then covered with the waterproof or sheeting. The paper or sheeting shall be in pieces large enough to cover the entire width and edges of the slab and shall be lapped not less than twelve (12) inches. Paper or sheeting shall be adequately weighted to prevent displacement or billowing due to wind. A continuous bank of earth shall secure paper or sheeting folded down over the side of the pavement widths. Tears or holes appearing in the paper or sheeting during the curing period shall be immediately repaired.

C. LIQUID MEMBRANE CURING COMPOUND: Pigmented liquid membrane curing compound shall meet the specifications under ASTM C-309. The curing compound must be applied to cover the surface completely and uniformly at a rate which will achieve the performance requirement specified in AASHO specifications M-148 or ASTM Designation C-309. This method of curing shall be applied immediately behind the final finishing operation or after the initial curing when combinations of methods are used. Failure to provide complete and uniform coverage at the required rate will be cause for discontinuance of this method of curing and the substitution of one of the other approved methods. The compound shall be kept agitated to prevent the pigment from settling. Special care shall be taken to apply the curing compound to the pavement edges immediately after the forms have been removed.

ITEM 10.0 JOINTS (All Joints shall be constructed as per Appendix "C"): Longitudinal and transverse joints shall be constructed as shown on the plans and construction joints wherever construction may require them.

Longitudinal joints are those joints parallel to the lane of construction. They may be either intermediate center joints or the construction joints between construction lanes.

Expansion joints may be only transverse. They are used only where specifically shown on the plans.

Transverse joints shall be contraction, expansion , or construction joints.

The edges of the pavement and those joints where such edging is shown on the plans shall be rounded with an edger having a radius of 1/8 inch. Transverse joints shall be continuous across the entire paved area, including the curb.

A. EXPANSION JOINTS: Expansion joints, where shown on the plans, shall conform to the specifications in Item 2.G.1 of Appendix "A" of these regulations. They shall extend the entire width of the pavement. They shall be of the dimensions and spacing as shown on the plans. The filler shall be held accurately in place during the placing and finishing of the concrete by a bulkhead, a metal channel cap or other approved method. Expansion joints shall be located in pavement sections entering a curve at the PC and PT, at all street intersections at the point of curvature of the turning radii entering the intersection and at cul-de-sacs or turn arounds at the point of curvature of the first turning radii approaching the turn-around.

Under no circumstances shall any concrete be left above the expansion material or across the joint at any point. Any concrete spanning the ends of the joint next to the forms shall be carefully cut away after the forms are removed.

Before the pavement is opened to traffic, the groove above the filler shall be cleaned and sealed with specified joint sealing material covered under Item 2.G.2 of Appendix "A" of these regulations.

B. TRANSVERSE JOINTS: Transverse Contraction Joints shall be of sawed, formed dummy groove or Premolded strip type. All transverse joints shall be one-fourth (1/4) of the pavement thickness.

The spacing of undoweled contraction joints shall be specified by the design engineer and shall be based on accurate performance records from streets in service. In no case shall the contraction joints be spaced at intervals greater than twenty (20) feet.

If sawed joints are specified on the plans, they shall be sawed early enough to control cracking, but late enough to prevent any damage by blade action in the slab surface and to the concrete immediately adjacent to the joints.

C. CONSTRUCTION JOINTS: Transverse construction joints of the type shown on the plans shall be placed wherever the placing of concrete is suspended for more than thirty (30) minutes. A transverse construction joint with smooth bars shall be used if the joint occurs at the location of a contraction joint. Deformed tie bars are used if the joint occurs at any other locations.

D. LONGITUDINAL JOINTS: Longitudinal joints shall be placed as shown on the plans. They shall be of the sawed, dummy groove, premolded strip of tied construction type. All longitudinal sawed joints shall conform to Item 10.B of Appendix "A" of these regulations. Joints between construction lanes shall be the tied construction type with keyway and J bars in accordance with joint details in Appendix "C". The depth of longitudinal shall be at least

one-fourth (1/4) of the pavement thickness. They shall coincide with lane markings wherever possible and shall be provided between each traffic lane.

E. INTEGRAL CURB JOINTS: In the construction of transverse joints of concrete integral curb pavement, special care must be taken to see that all transverse joint extend continuously through the pavement and curb, except tied transverse construction joints.

ITEM 11.0 TIE BARS: Tie bar, when shown on the plans, shall be of threaded J-bar type and of the dimensions and at the spacing specified according to Appendix "C".

ITEM 12.0 JOINT SEALER: After the curing period, all sawed and dummy groove joints in the pavement shall be cleaned and sealed with an acceptable sealer, as specified by the Kentucky Department of Transportation Specifications. All joint sawing residue, dirt, and curing membrane shall be removed prior to sealing. Any excess material should be removed from the pavement surface as soon after sealing as possible.

ITEM 13.0 STRUCTURES ENCOUNTERED IN THE PAVED AREA:

A. MANHOLES AND CATCH BASINS: All manholes and catch basins encountered in the areas to be paved shall be raised or lowered to the surface of the new pavement. Catch basins may be separated from the pavement and curb by boxing out around basin.

When a joint falls within five (5) feet of or contacts basins, manholes, or other structures, one or more panels either side of opening shall be shortened to permit joint to fall on round structures and at a corner of rectangular structures as shown in Appendix "C" of these regulations.

ITEM 14.0 PROTECTION AND OPENING TO TRAFFIC: Traffic shall be excluded from the pavement by erecting and maintaining barricades and signs until the concrete is at least fourteen (14) days old or has attained a compressive strength of 3,500 pounds per square inch and/or 550 pounds per square inch flexural strength. This traffic restriction shall apply to the contractor's construction equipment and vehicles as well as general traffic. As soon as curing and sealing are completed, the contractor shall clean up the pavement free from all debris.

ITEM 15.0 CURB, GUTTER, SIDEWALK, AND DRIVEWAYS: Construction of curb, gutter, sidewalk, and driveways shall require the same care as the pavement. The preceding requirements shall apply, where pertinent, to the construction of curb, gutter, sidewalks, and driveways within the right-of-way. In addition, sidewalks or driveways shall be constructed so that the transverse joint spacing shall be equal to the width of the sidewalk or driveway, but in no case shall the transverse joint spacing for driveways exceed twelve (12) feet and not greater than five (5) feet for sidewalk spacing. Sidewalk and driveways within the right-of-way, shall be constructed with a pavement thickness of at least four (4) and six (6) inches, respectively (see Appendix "C" for typical section details).

ITEM 16.0 PAVEMENT THICKNESS: Pavement thickness for each type of street classification shall be as provided in Table 3 and reinforcing pavement mesh shall not be required. Streets that are subjected to exceptionally heavy truck traffic shall require a more complete detailed analysis by the subdivider's engineer and approved by the Planning Commission.
All arterial streets shall be designed in accordance with the requirements of the Kentucky Department of Transportation.

TABLE 3

MINIMUM PAVEMENT THICKNESS FOR STREETS- PORTLAND CEMENT CONCRETE*

STREET CLASSIFICATION**	PAVEMENT THICKNESS (INCHES)
LOCAL STREETS INCLUDING COURTS AND CUL DE SACS	6
SUBCOLLECTOR	7
COLLECTOR	8

Street shall be designed according to the typical street section details in Appendix "C".

Where streets are to serve industrial or commercial areas, the pavement design shall be based on a study prepared by the subdivider's engineer projecting the type of vehicles using the street and traffic volumes approved by the Planning Commission.

ITEM 17.0 SURFACE TOLERANCES AND TESTING SURFACE: The contractor shall utilize proper and adequate methods during and after the construction of concrete pavements to prevent unacceptable slumping and to correct unavoidable slumping of the pavement edges due to all causes, in accordance with Section 501 of the Kentucky Department of Transportation standard specifications.

APPENDIX B

ASPHALT CONCRETE PAVEMENT FOR STREET AND DRIVEWAY CONSTRUCTION

ASPHALT CONCRETE PAVEMENT FOR STREET AND DRIVEWAY CONSTRUCTION

The work covered by these specifications consists of furnishing all labor, equipment and materials and in performing all operations in connection with the construction of asphalt concrete pavement for streets and alleys in accordance with these specifications and the applicable drawings.

ITEM 1.0 GRADING: This item shall consist of all grading above or below subgrade elevations, of whatever nature, required to bring the street to the proper subgrade elevation, including necessary excavation for curb, gutter, sidewalk, construction of embankments, excavation and proper sloping of all cuts, and other work incidental thereto.

A. EXCAVATIONS: All excavations shall be made to approximate subgrade elevations and shall be true to grade. No excavation shall be made below subgrade elevation except to remove a spongy material, vegetation matter, or other material as ordered or approved by the inspector.

B. EXCAVATION BELOW SUBGRADE: Whenever excavation below subgrade elevation to remove spongy material, vegetation matter, or other material is required, the contractor shall remove same in a satisfactory manner, and shall replace it with satisfactory material in layers not to exceed twelve (12) inches in thickness and shall thoroughly compact each layer before the next layer is placed.

C. CONSTRUCTION OF EMBANKMENTS: All topsoil and heavy root system shall be removed to eliminate all vegetation from the area upon which the embankment is to be constructed. Soil so removed shall not be used in construction of the embankment.

Embankment shall be constructed, of approved materials, to approximate subgrade elevation in layers to not exceed eight (8) inches in thickness and extending the full width of the embankment. Each layer shall be compacted to not less than ninety-five (95) percent of the density determined from the "Standard Test for Moisture-Density Relationship" (AASHO Designation T-99) in areas involving structures and public improvements including slopes greater than 3:1.

D. SUBGRADE: The subgrade is defined as the top one (1) foot of the soil profile at finished grade prior to placing the pavement. This top one (1) foot of soil will consist of (a) compacted fill placed for embankments as outlined in Item C; (b) undisturbed soils in the transitional areas from cut to fill immediately below the topsoil; (c) undisturbed soils at depths greater than three (3) feet below the original ground surface in cut areas. The top one (1) foot of subgrade shall be compacted to 98 percent of maximum density as determined by the Standard Proctor Moisture Density Test (ASTM D698-78 or AASHO T-99) or 90 percent of maximum density as determined by the modified Proctor Maximum Density Test (ASTM DI 557-78 or AASHO T-180) within two (2) percent of optimum moisture content on the dry side of the curve or four (4) percent of optimum moisture content on the wet side of the curve immediately prior to placing the pavement. In transitional areas from cut to fill, the soils have been subject to seasonal changes of freezing and thawing and wetting and drying. These soils will exist at moisture contents ell above optimum moisture content and at densities on the order of 60 to 80 percent of maximum density (ASTM D698-78).

These soils shall be scarified, aerated and dried in order to obtain the specified percent compaction for subgrade. Soils in cut areas, three (3) feet below original grade, will exist at moisture contents above optimum moisture content and at densities on the order of 90

percent of maximum density (ASTM D698-78). These soils shall be scarified, aerated and dried in order to obtain the specified percent compaction for subgrade.

Any soft or yielding areas, resulting from high moisture content that are encountered at the time of construction shall be scarified, aerated, and dried to reduce the moisture content nearer to optimum moisture content, then recompacted to the specified density.

The subgrade shall be shaped to plan elevation and cross section. Immediately prior to placing the concrete, the subgrade shall be checked for conformity with the cross section shown on the plans by means of an approved template on the side forms. If necessary, the materials shall be removed or added to bring all portions of the subgrade to correct elevations. The subgrade shall be thoroughly compacted and again checked with the template. Concrete shall not be placed on any art of the subgrade, which has not been checked for correct elevation. The subgrade shall be clean of loose or wet material prior to placing concrete.

Prior to placing the concrete the Contractor shall proof roll th compacted subgrade with a fully loaded single axle truck. The Inspector shall observe the proof rolling for consistency. Areas, which are subject to excessive pumping or rutting, shall be reworked and recompacted as described above. All subgrade testing shall be made not more than 48 hours prior to placement of pavement, unless extreme weather conditions dictate - retesting rain, freezing temperature, excessive temperature, etc. The appropriate inspector shall be contacted not less than twelve (12) hours prior to placement of materials.

E. EQUIPMENT FOR COMPACTION OF EMBANKMENT AND SUBGRADE:
Any compaction equipment capable of uniformly producing the required embankment and subgrade densities, without lamination of, or within, successive layers, will be permitted. All compaction equipment shall be in good condition and shall be operated efficiently to assure uniform compaction.

F. SUBGRADE FOR CURBS, GUTTERS, SIDEWALKS, AND DRIVEWAYS:
Subgrade areas to be occupied by curbs, gutters, sidewalks, and driveways shall be excavated, backfilled, as required, and compacted to establish grade. This work shall be done with particular care in accordance with all requirements herein.

G. EQUIPMENT OPERATED ON THE STREETS: The contractor shall be permitted operate only pneumatic-tired equipment over any paved street surfaces and shall be responsible for correction of any damage to street surfaces in any manner resulting from the contractor's operations.

H. PROTECTION OF UTILITY LINES: The contractor shall at all times take proper precautions for the protection of utility lines, the presence of which are known, or can be determined by the examination of appropriate maps of applicable agencies and the City.

I. SOILS WITH LESS THAN SIX (6) CBR'S: Soils and subgrades with CBR's less than six (6) must be stabilized in an acceptable manner as per City of Berea Guidelines for Pavement Design.

ITEM 2.0 PREPARATION OF EXISTING GRANULAR BASE COURSES FOR SURFACING:

A. DESCRIPTION AND GENERAL REQUIREMENTS: In areas where granular base course has been placed as a previous stage of street or road construction, the contractor shall blade, shape and compact the base course in conformance with the required dimensions, line, guide, and cross section to permit completion of the paving work. When directed by the inspector, additional base course aggregate shall be provided or excess aggregate removed and disposed of by the contractor as to provide conformance with the required roadway section.

B. THICKNESS OF SURFACING REQUIRED FOR EXISTING GRANULAR BASE COURSES: The existing thickness of granular base comprises a portion of the required Design Thickness as specified in Item 4.0B.

ITEM 3.0 ASPHALT PAVEMENT:

A. DESCRIPTION AND GENERAL REQUIREMENTS: This item shall consist of furnishing all materials and performing all construction procedures required to build an asphalt pavement on prepared and approved subgrade, conforming to the requirements of these specifications and to the pavement designs shown on the approved plans. It may include any, or all, but is not necessarily limited to, materials and methods specified under this item (Item 3).

Asphalt pavement shall consist of an asphalt concrete surface course, or courses, constructed on a base course, or courses and/or subbase course designed in compliance with the requirements of Item 4.0.B of Appendix "B".

Successive layers of the pavement shall be offset from the edge of the underlying layer a distance equal to the course thickness of the lower layer except when abutting existing construction. When the asphalt layers of the pavement abuts a building foundation, barrier curb or similar vertical surface, the abutting surface shall be heavily painted with asphalt prior to construction of the asphalt course. The surface course shall be finished one-fourth (1/4) inch above adjacent flush construction to permit proper compaction.

B. MATERIALS AND CONSTRUCTION REQUIREMENTS:

1. **ASPHALT CONCRETE SURFACE COURSE:** Asphalt Concrete Surface Course materials and construction shall conform to the current requirements of the Kentucky Department of Transportation, Bureau of Highways, for Asphalt Concrete Surface (Type B and Binder (Section 401, 402). Surface course mixture composition shall conform to the requirements Surface Type B and Binder as set forth in Table 5. Minimum Asphalt Concrete Surface Course Thickness shall be as stated in Table 6 of these regulations.

2. **ASPHALT CONCRETE BASE COURSE:** Asphalt Concrete Base Course materials and construction shall conform to the current requirements of the Kentucky Department of Transportation, Bureau of Highways, Specifications for Asphalt Concrete Base Course (Section 401, 403). Composition requirements of the mixture shall conform to the gradation limits for Asphalt Concrete Base Course 1, set forth in Table 5. Asphalt content used shall fall within the range shown and shall be approved by the inspector.

3. **CRUSHED AGGREGATE BASE COURSE:**

(A.) DESCRIPTION: Crushed Aggregate Base Course, when provided for in the approved structural design of the pavement, shall consist of a granular layer constructed on prepared subgrade or subbase in accordance with these specifications and in conformity with the approved dimensions, lines, grades, and cross sections.

(B.) MATERIALS AND CONSTRUCTION METHODS: Crushed Aggregate Base

course shall conform to all the current requirements for materials and construction methods of the Kentucky Department of Transportation for Dense Graded Aggregate Base Course as per Section 303.

4. GRANULAR SUBBASE COURSE:

(A.) DESCRIPTION: Subbase, when provided for in the approved structural design of the pavement, shall consist of a granular layer conforming to the following material and construction specifications.

(B.) MATERIALS AND CONSTRICTION METHODS: Crushed Aggregate Subbase Course shall conform to all the current requirements for materials and construction methods of the Kentucky Department of Transportation for Dense Graded Aggregate Subbase Course as per Section 303.

5. ASPHALT PRIME COAT: Asphalt Prime Coat shall be applied to the surface of the surface of granular courses upon which asphalt base or surface courses will be constructed.

Asphalt Prime shall conform to the Kentucky Department of Transportation requirements for Cutback Asphalt Emulsion Primer Type L as per Section 407. Prime shall be applied to the surface of granular base course at a rate of 0.25 to 0.50 gallons per square yard, as directed by the Inspector, in conformance with requirements of the referred to specification.

6. ASPHALT TACK COAT: Tack Coat shall consist of SS-1h, meeting the current requirements of the Kentucky Department of Transportation, it shall, when directed by inspector, be diluted with equal parts of water. Application equipment and procedure shall conform to the requirements of the Kentucky Department of Transportation for Tack Coats as per Section 407. Tack Coat shall be applied to the surface of asphalt courses that have become dusty or dry from traffic use at a rate of 0.10 gallon per square yard of the diluted SS-1h before the subsequent course is constructed or in other circumstances when the Inspector so directs.

ITEM 4.0 DESIGN OF ASPHALT PAVEMENT STRUCTURE:

A. DESCRIPTION: Asphalt pavement structures for subdivision streets shall be designed in conformance with the requirements of this specification. Thickness of the total pavement and of component layers shall be determined on the basis of Street Classification.

B. PAVEMENT THICKNESS REQUIREMENTS: Thickness of component layers of the pavement for streets within the right-of-way and of the total pavement structure shall be determined as per Table 6. Where streets are to serve Industrial or Commercial areas, the pavement design shall be based on a study prepared by the subdivider's engineer projecting the type of vehicles using said streets and traffic volumes, and approved by the Planning Commission's duly authorized representative.

ITEM 5.0 ADJUSTING MANHOLE TOPS:

A. DESCRIPTION: The contractor shall raise or lower existing manhole tops to coincide with the finished grade elevation of the paving.

TABLE 5.

COMPOSITION LIMITS FOR ASPHALT MIXTURES

PERCENT PASSING BY SIEVE LEVEL	ASPHALT CONCRETE BASE TYPE I	BINDER	SURFACE TYPE B
1-1/2	100	----------	----------
1"	85-100	100	----------
3/4 "	----------	80 - 100	----------
½"	50-80	----------	100
3/8 "	----------	54-76	85-100
No. 4	30-50	37-57	60-80
No. 8	25-45	25-45	40-60
No. 16	15-34	15-35	25-50
No. 50	5-20	5-20	5-20
No. 100	3-10	3-10	3-12
No. 200	----------	----------	2 - 6
% Asphalt AC 20	3.5 - 6.0	4.0 - 7.0	4.0 - 8.0

TABLE 6

PAVEMENT DESIGN

The Engineer shall design the base and pavement thickness using the procedures in the AASHTO Pavement Design Guide or as per Kentucky Transportation Cabinet requirements. The Engineer shall compare the results of the pavement design to the thickness in the table below. In no case shall the thickness of the base and asphalt course be less than those shown in the table below. CBR Values shall be used by the Engineer in designing required pavement thickness.

Soil and rock testing are to be performed in accordance with ASTM, AASHTO or Kentucky Transportation Cabinet test methods. Bag samples consisting of soils which will be used to construct roadway/street fills, and of soils near subgrade elevations, shall be subject to particle size analyses, specific gravity, Atterberg limits, standard Proctor and CBR testing. These parameters shall be used during engineering evaluations to provide fill compaction and embankment construction criteria.

Soil profile borings shall be performed at maximum 300-foot center-to-center spacing along the roadway alignment through both cut and fill sections. If the roadway length is less than 300 feet, then a minimum of two (2) profile borings shall be taken at equal distance along the roadway alignment.

All soils with a CBR of less than six (6) will require soil stabilization.

An acceptable method of soil stabilization is to remove 12-18 inches of the weak material and replace it with 12-18 inches of No. 2 stone, with a 1-inch layer of DGA or a geotextile between the soil and the No. 2's. Chemical soil stabilization is also acceptable.

Minimum Pavement Thicknesses for Soils with CBR's of Six or Greater

Arterials and Non-residential Streets

1.5" Surface
9.0" Base
8.0" DGA

Collector/Connecter Streets

1.5" Surface
6.0" Base
8.0 " DGA

Frontage/Service Roads, Local (Minor)Streets and Cul-de-Sacs

1.5" Surface
3" Base
10" DGA

Concrete pavements will require a specific design in each and every case and the above tables shall not apply.

MATERIALS SPECIFICATIONS AND CONSTRUCTION SPECIFICATIONS

Material specifications, construction methods, materials and procedures for all aspects of construction, unless noted elsewhere in these Regulations, shall conform to the descriptions and details as stated in the latest edition of the Kentucky Transportation Cabinet/Department of Highways "Standard Specifications for Roads and Bridge Construction". Categories may include but are not limited to:

A. Earthwork
B. Aggregate base courses
C. Asphalt pavements
D. PCC pavement and non-structural concrete construction
E. Structures and concrete
F. Drainage, traffic and roadside construction
G. Materials details

APPENDIX C

TYPICAL DETAIL SECTIONS FOR STREETS, CURB AND GUTTER, CATCH BASINS, AND OTHER DESIGNS

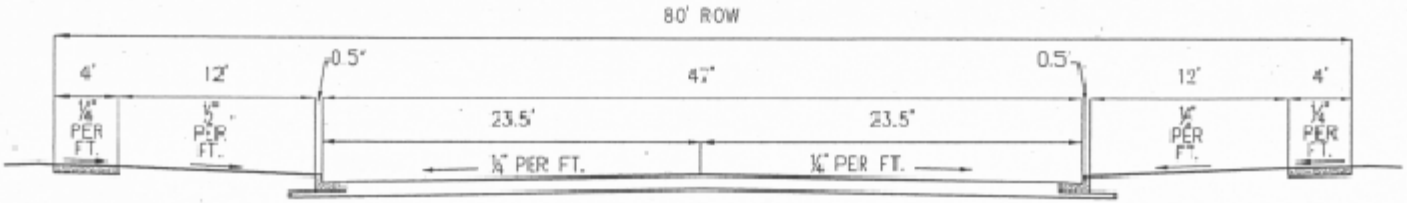

ARTERIAL STREET

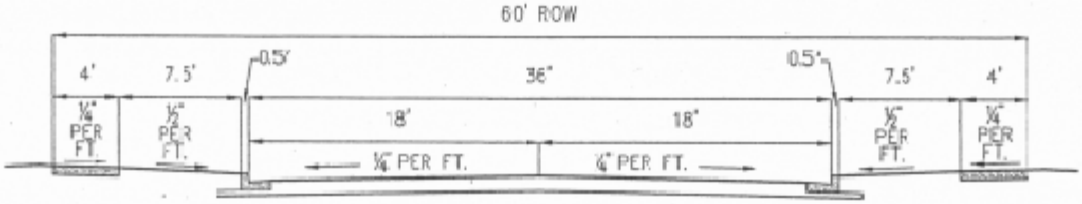

COLLECTOR STREET

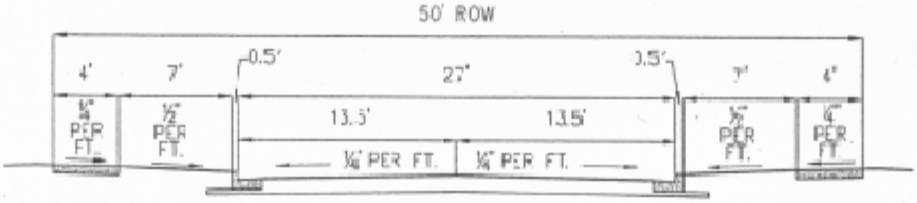

FRONTAGE/SERVICE ROAD
LOCAL (MINOR) STREETS
CUL-DE-SAC

CITY OF BEREA

TYPICAL STREET SECTIONS

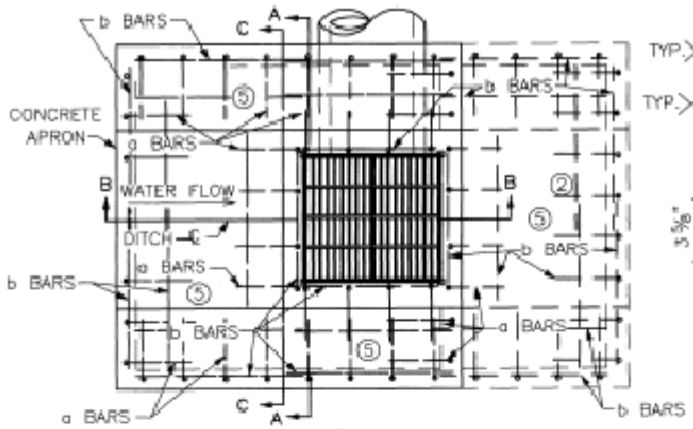

PLAN

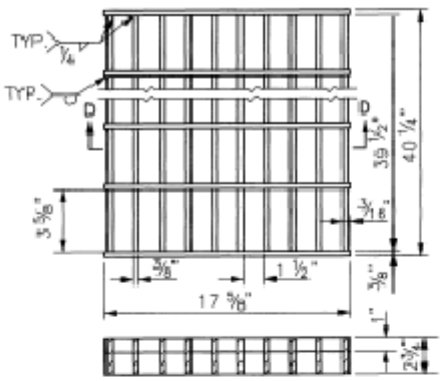

SECTION D-D

DETAIL OF GRATE (TWO REQUIRED)

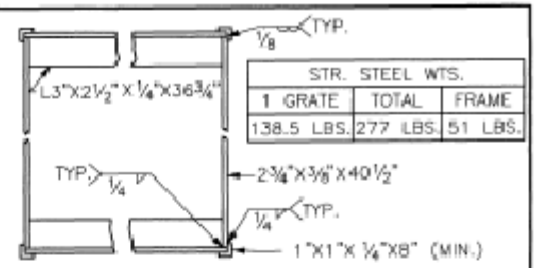

STR. STEEL WTS.		
1 GRATE	TOTAL	FRAME
138.5 LBS.	277 LBS.	51 LBS.

DETAIL OF FRAME

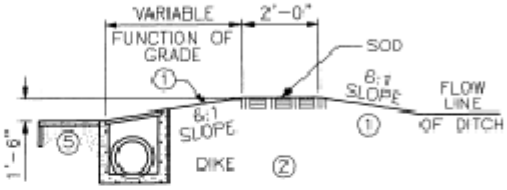

SECTION OF DIKE

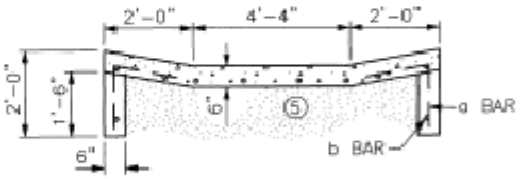

SECTION C-C

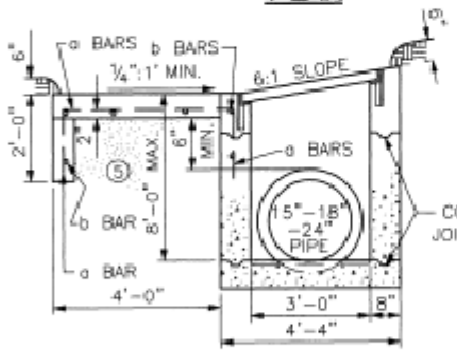

SECTION B-B

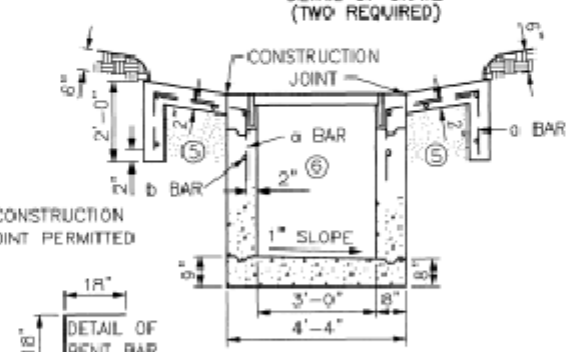

SECTION A-A

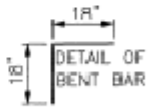

NOTES:

1. 6:1 SLOPES ARE WITH REFERENCE TO DITCH GRADE.
2. WHEN A BOX INLET IS PLACED IN A SAG, OMIT THE EARTH DIKE AND LONGITUDINAL SLOPE OF THE GRATE, AND PROVIDE A CONCRETE APRON ON EACH SIDE OF THE INLET.
3. RATE OF INCREASE OR DECREASE 0.36 CU. YD. PER FOOT IN HEIGHT.
4. DEDUCT APPROX. 0.1 CU. YD. OF CONCRETE PER PIPE.
5. COMPACT THIS VOLUME WITH D.G.A. BASE OR EQUIVALENT.
6. STEPS ARE REQUIRED FOR DEPTHS GREATER THAN 4', REFER TO STD. DWG. 103.

APPROX. QUANTITIES

TYPE	CONCRETE 3'-9" (3) BOX	REINF. STEEL
SAG	4.4 CU. YD. (4)	282 LBS.
GRADE	3.4 CU. YD. (4)	192 LBS.

BILL OF REINFORCEMENT

BAR	NO.	SIZE	LENGTH	APPROX. SPACING
a	40 OR 56	#5	3'-0"	12" C TO C
b	25 OR 40	#4	4'-0"	AS SHOWN

NO.	DATE	REVISION DESCRIPTION	BY

DIVISION OF ENGINEERING

SURFACE INLET TYPE "A"

STANDARD STORM DRAINAGE DRAWING NO. 120

APPROVAL: URBAN COUNTY ENGINEER 03-07-2000 DATE; COMMISSIONER 03-07-2000 DATE

LEXINGTON-FAYETTE URBAN COUNTY GOVERNMENT, DEPARTMENT OF PUBLIC WORKS

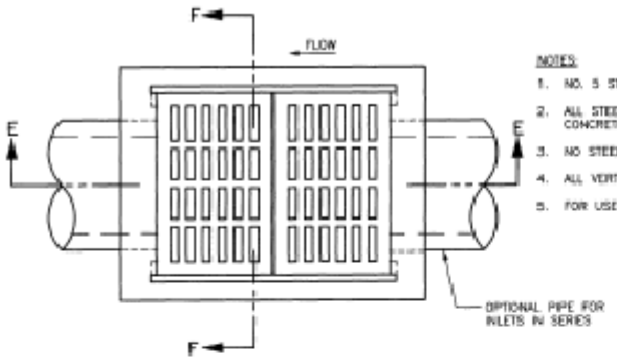

PLAN VIEW

NOTES:

1. NO. 5 STEEL SHALL BE USED THROUGHOUT ON 12" CENTERS.
2. ALL STEEL SHALL HAVE A 2" MINIMUM CLEARANCE TO ANY CONCRETE FACE.
3. NO STEEL IS REQUIRED IN THE BOTTOM SLAB.
4. ALL VERTICAL STEEL SHALL EXTEND 4" INTO BOTTOM SLAB.
5. FOR USE IN PAVED AREAS ONLY.

ISOMETRIC VIEW

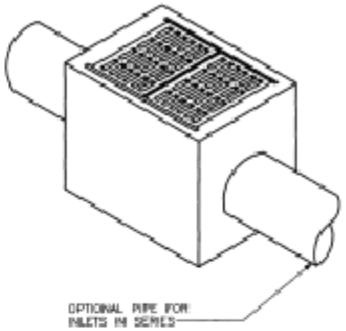

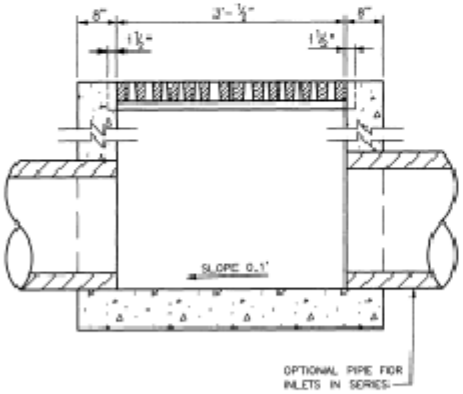

SECTION E-E

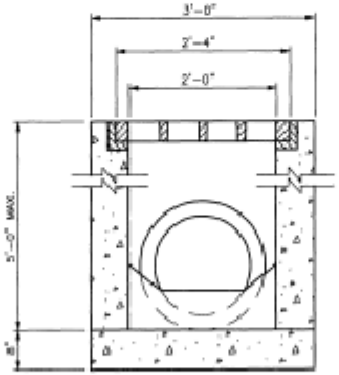

SECTION F-F

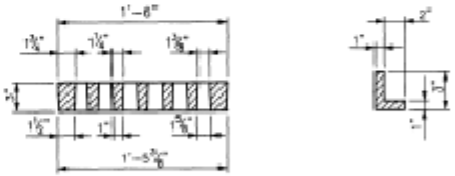

GRATE DETAILS

NO.	DATE	REVISION DESCRIPTION	BY

DIVISION OF ENGINEERING

SURFACE INLET TYPE "B"

STANDARD STORM DRAINAGE DRAWING NO. 12.1

APPROVAL: 01-03-2006 DATE

URBAN COUNTY ENGINEER 01-03-2006 DATE

COMMISSIONER

LEXINGTON-FAYETTE URBAN COUNTY GOVERNMENT, DEPARTMENT OF PUBLIC WORKS

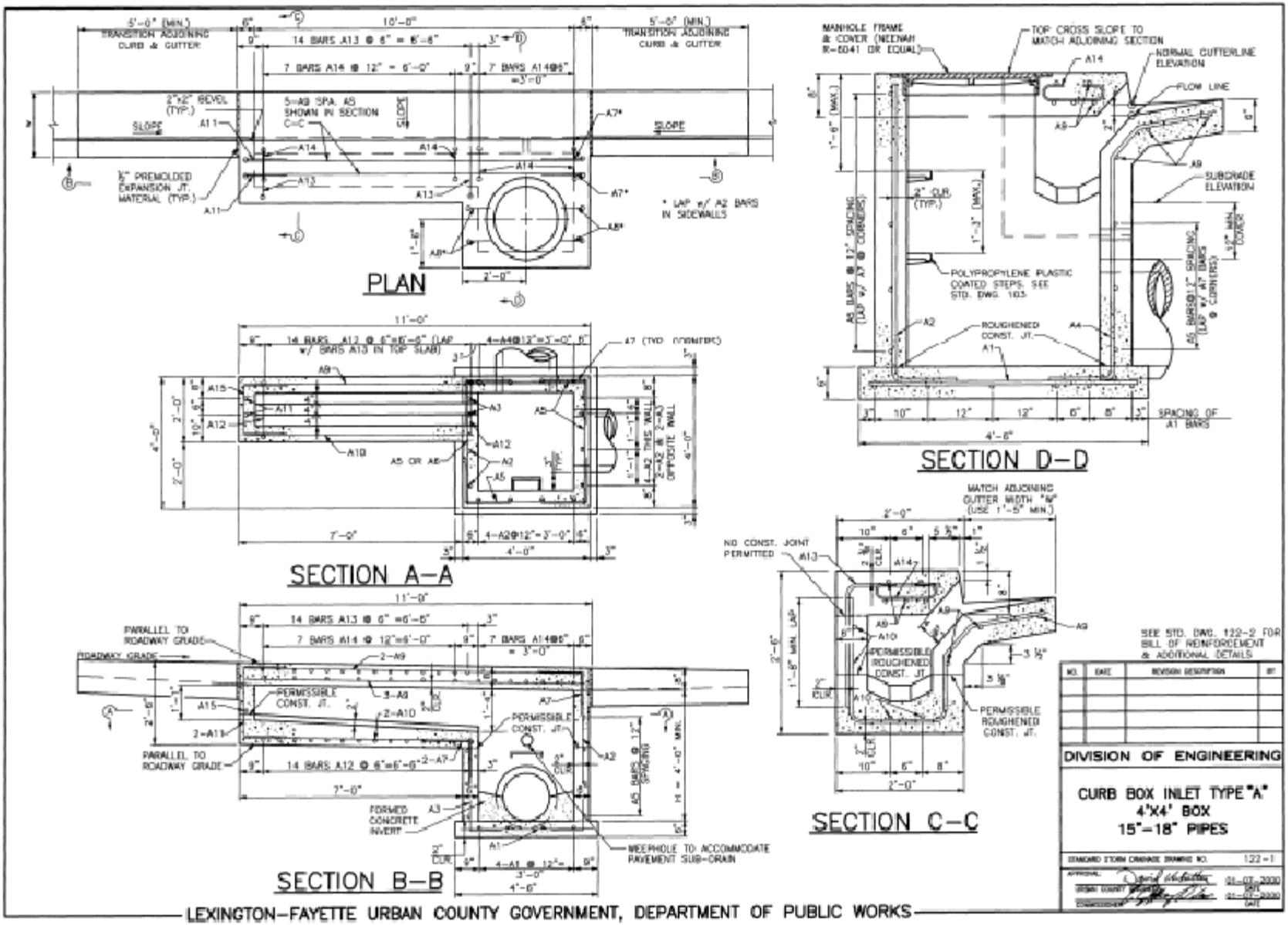

SEE STD. DWG. 122-2 FOR BILL OF REINFORCEMENT & ADDITIONAL DETAILS

NO.	DATE	REVISION DESCRIPTION	BY

DIVISION OF ENGINEERING

CURB BOX INLET TYPE "A"
4'X4' BOX
15"-18" PIPES

STANDARD STORM DRAINAGE DRAWING NO. 122-1

APPROVAL: 01-07-2000 DATE
URBAN COUNTY ENGINEER 01-07-2000 DATE
COMMISSIONER

LEXINGTON-FAYETTE URBAN COUNTY GOVERNMENT, DEPARTMENT OF PUBLIC WORKS