APPENDIX A

CONCRETE FOR STREET, CURB & GUTTER, SIDEWALK & DRIVEWAY CONSTRUCTION

CONCRETE FOR STREET, CURB & GUTTER, SIDEWALK & DRIVEWAY CONSTRUCTION

The work covered by these specifications consists of furnishing all labor, equipment and materials and in performing all operations in connection with the construction of airentrained Portland Cement concrete pavement for streets and alleys in accordance with these specifications and the applicable drawings. The cement concrete pavement work shall consist of a single course of cement concrete, including reinforcement and longitudinal and transverse joints, when required, constructed on a prepared subgrade or insulation course in conformity with the lines, grades, and cross sections shown on the plans.

ITEM 1.0 GRADING: This term shall consist of all grading above or below subgrade elevations, of whatever nature, required to bring the street to the proper subgrade elevation, including necessary excavation for curb, gutter, sidewalk, construction of embankments, excavation and proper sloping of all cuts, and other work incidental thereto.

A. EXCAVATIONS: All excavations shall be made to approximate subgrade elevations and shall be true to grade. No excavation shall be made below subgrade elevation except to remove a spongy material, vegetation matter, or other material as ordered or approved by the inspector.

B. EXCAVATION BELOW SUBGRADE: Whenever excavation below subgrade elevation to remove spongy material, vegetation matter, or other material is required, the contractor shall remove same in a satisfactory manner, and shall replace it with satisfactory material in layers not to exceed twelve (12) inches in thickness and shall thoroughly compact each layer before the next layer is placed.

C. CONSTRUCTION OF EMBANKMENTS: All topsoil and heavy root system shall be removed to eliminate all vegetation from the area upon which embankment is to be constructed. Soil so removed shall not be construction of embankment. Embankment shall be constructed, of approved materials, to approximate subgrade elevation in layers to not exceed eight (8) inches in thickness and extending the full width of the embankment. Each layer shall be compacted to not less ninety-five (95) percent of the density determined from the "Standard Test for Moisture-Density Relationship" (AASHO Designation T-99) in areas involving structures and public improvements including slopes greater than 3:1.

D. SUBGRADE: The subgrade is defined as the top one (1) foot of the soil profile at finished grade prior to placing the pavement. This top one (1) foot of soil will consist of: compacted fill placed for embankments as outlined in item C; (b) undisturbed soils in the transitional areas from cut to fill immediately below the topsoil; (c) undisturbed soils at depths greater than three (3) feet below the original ground surface in cut areas. The top one (1) foot of subgrade shall be compacted to ninety-eight (98) percent of maximum density as determined by the Standard Proctor Moisture Density Test (ASTM D698-78 or AASHO T-99) or ninety (90) percent of maximum density as determined by the modified Proctor moisture-density test (AST M DI 557-78 or A ASHO T-180) within two (2) percent of optimum moisture content on the dry side of the curve or four (4) percent of optimum moisture content on the wet side of the curve immediately proper to placing the pavement. In

transitional areas from cut to fill, the soils have been subject to seasonal changes of freezing and thawing and wetting and drying. These soils will exist on the order of 60 to 80 percent of maximum density (ASTM D698-78).These soils shall be scarified, aerated and dried in order to obtain the specified percent compaction for subgrade Soils in cut areas, three (3) feet below original grade, will exist at moisture content and at densities on the order of ninety (90) percent of maximum density (ASTM D698-78). These soils shall be scarified, aerated, and dried in order to obtain the specified percent compaction for subgrade.

Any soft or yielding areas, resulting from high moisture content that are encountered at the time of construction shall be scarified, aerated, and dried to reduce the moisture content nearer to optimum moisture content, then recompacted to the specified density. The subgrade shall be shaped to plan elevation and cross section. Immediately prior to placing the concrete, the subgrade shall be checked for conformity with the cross section shown on the plans by means of an approved template on the side forms. If necessary, the materials shall be removed or added as required to bring all portions of the subgrade to correct elevations. The subgrade shall be thoroughly compacted and again checked with the template. Concrete shall not be placed on any part of the subgrade, which has not been checked for correct elevation. The subgrade shall be clean of loose or wet material prior to placing concrete.

Prior to placing the concrete the Contractor shall proof roll the compacted subgrade with a fully loaded single axle truck. The inspector shall observe the proof rolling for consistency. Areas, which are subject to excessive pumping or rutting, shall be reworked and recompacted as described above. All subgrade testing shall be made not more than 48 hours prior to placement of pavement, unless extreme weather conditions dictate retesting (rain, freezing temperature, excessive temperature, etc.) The appropriate inspector shall be contacted not less than Twelve (12) hours prior to placement of materials.

E. **EQUIPMENT FOR COMPACTION OF EMBANKMENT AND SUBGRADE:** Any compaction equipment capable of uniformly producing the required embankment and subgrade densities, without lamination of, or within, successive layers, will be permitted. All compaction equipment shall be in good condition and shall be operated efficiently to assure uniform compaction.

F. **SUBGRADE FOR CURBS, GUTTERS, SIDEWALKS AND DRIVEWAYS:** Subgrade areas to be occupied by curbs, gutters, sidewalks, and driveways shall be excavated, backfilled, as required, and compacted to establish grade. This work shall be done with particular care in accordance with all requirements herein.

G. **EQUIPMENT OPERATED ON THE STREETS:** The contractor shall be permitted to operate only pneumatic-tired equipment over any paved street surfaces and shall be responsible for correction of any damage to street surfaces in any manner resulting from the contractor's operations.

H. **PROTECTION OF UTILITY LINES:** The contractor shall at all times take proper precautions for the protection of utility lines, the presence of which are known, or can be determined by the examination of appropriate maps of applicable agencies.

ITEM 2.0 MATERIALS: Concrete shall be com posed of Portland Cement, air-entraining agent, aggregates and water.

A. PORTLAND CEMENT: Cement of the type specified shall conform to requirements of the current ASTM specifications for Portland Cement Type I or Type III (Designation C-150). Cement which for any reason has become partially set or which contains lumps of caked cement shall be rejected. Either packaged or bulk cement may be used.

B. AIR-ENTRAINING AGENT: Air-entraining agents shall conform to the requirements of the current ASTM Specifications for Air-entraining agents for concrete (Designation C-260)

C. CHEMICAL ADMIXTURES FOR CONCRETE: Admixture of the type specified shall conform to requirements of the current ASTM Specifications for Admixtures of Type A and Type D (Designation C-494).

D. AGGREGATES: All aggregates for concrete shall meet the current standard requirements for concrete pavements of the Kentucky Department of Transportation, Bureau of Highways, or the current ASTM Specification for concrete aggregates (Designation C-33). Aggregates shall be so handled that moisture content and gradation are reasonably uniform and do not change appreciably from batch to batch or hour to hour. No aggregates shall be used which have become contaminated or intermixed. Frozen aggregates or aggregates containing frozen lumps shall be thawed before use.

E. WATER: Water used in mixing or curing concrete shall be clean and free from injurious amounts of oil, acids, salt, alkali, or organic materials or other substances harmful to concrete. Normally water from public supplies or which is suitable for drinking is always satisfactory.

F. REINFORCING STEEL: Reinforcing steel, if specified, shall conform to current Standard Specifications of the Kentucky Department of Transportation, Bureau of Highways.

G. Joints:

1. **EXPANSION JOINTS:** Expansion joints shall be non-extruding performed joint fillers and shall conform to current Standard Specifications for the Kentucky Department of Transportation. The selection of the type will be at the contractor's option.

2. **JOINT SEALING COMPOUND:** Sealing material for filling all types of pavement joints shall comply with current Standard Specifications for the Kentucky Department of Transportation. Sealing material shall be Hot Pour Rubber-Asphalt Sealer (SEALTIGHT # 161T) or approved equal.

3. **PREMOLDED JOINT MATERIAL:** Premolded parting strips, when called for on the plans, shall be at least 1/8 inch thick and of width shown on the plans. They shall consist of strips which have been formed from layers of felt or shredded felt, cane, wood, or other suitable fibers, securely bound and uniformly impregnated with a suitable binder. They shall be of such character that they will not be permanently deformed by ordinary handling during hot weather or become hard and brittle in cold weather.

H. CURING:

1. **BURL AP OR COTT ON M ATS:** Burlap or cotton mats shall at time of using, be in good condition, free from holes, dirt, clay or any other substance which would have a deleterious effect upon concrete. Burlap or cotton maps shall be of quality specified by AASHO (Designation M-182 and M-73, respectively).

2. **WATERPROO F PAPER OR PL ASTIC SHEETS:** Waterproof paper or plastic sheets for curing concrete shall conform to the -for current ASTM or AASHO specifications for waterproof paper curing concrete, C-171 and M-139 , respectively. Moisture retention shall conform to the requirements of ASTM (Designation C -156).

3. **MEM BRAN E CUR ING COMP OUND:** Membrane curing compounds shall be the white pigmented type and conform to the requirements for the current AASH O Standard Specifications for Liquid Membrane Forming compounds for curing concrete (Designation M -118 or ASTM Designation C- 309).

ITEM 3.0 BATCHING: Measurement and batching of cement, fine and coarse aggregates shall be by weight. Scales in use shall be accurate when static load tested to +0.4 percent of the total capaCity of the scale. One sack of cement shall be considered to weigh ninety-four (94) pounds net. Bulk and cement from fractional sacks shall be weighed.

A. STRENGTH OF CONCRETE: The concrete shall attain a minimum expected strength of concrete at 28 days of 3,500 pounds per square inch compressive strength and/or 550 pounds per square inch flexural strength "modulus of rupture". Concrete specimens to check the adequacy of the delivered concrete for strength shall be made and cured in accordance with ASTM C-31, making and curing concrete compressive and flexural test specimens in the field, when requested by the inspector. Compressive strength specimens shall be tested in accordance with A STM C-39, and flexural strength determination shall be in accordance with ASTM C -78.

B. PROPORTIONING CONCRETE: It shall contain not less than five-and- one-half sacks of cement (ninety-four (94)lb per sack)per cubic yard of concrete and a maximum of five and one-half (5-½) gallons of water per sack of cement, including surface water contained in the aggregates. The proper portions of cement, water, and aggregates shall be determined in accordance with ACI Standard 613, "Recommended Practice for Selecting Proportions for Concrete", or the Portland Cement Association Booklet, "Design and Control of Concrete Mixers."

C. The entrained air shall be obtained by using air-entraining agent. All concrete shall be air-entrained in accordance with the following:

MAXIMUM SIZE OF AIR CONTENT

AGGREGATE (INCHES)	PERCENT BY VOLUME
1-1/2. 2-1/2	5 + 1%
3/4, 1	6 + 1%
3/8, ½	7-11-F + 1%

D. CONSISTENCY: The slump of the concrete shall not exceed five (5) inches when hand finishing techniques are employed, and shall not exceed three (3) inches when a mechanical finishing machine is used. The consistency shall be measured as described in the current ASTM Standard Method of Slump Test for Consistency of Portland Cement Concrete (Designation C143) or the Method Test for Ball Penetration for Portland Cement Concrete, ASTM (Designation C-360).

E. READY-MIXED CONCRETE: All ready-mixed concrete shall be furnished in accordance with the current ASTM specifications for ready-mixed concrete (Designation C-94). Any concrete, which is not plastic and workable when it reaches the subgrade, shall be rejected. When construction conditions are such that it is absolutely necessary for trucks hauling concrete to operate on the grade between forms, they shall not back over previously deposited fresh concrete.

1. **TIME OF DELIVERY:** Concrete shall be delivered and discharged from a truck mixer or agitator truck within a period of one and one-half (1 ½) hours at air temperatures up to eighty-five (85°) degrees Fahrenheit and one (1) hour at air temperatures higher than eighty-five (85°) degrees Fahrenheit after introduction of the water to the cement and aggregates or of the cement to the aggregates. Delivery tickets shall have this time clearly shown thereon, and the inspector shall check the same to be certain that delivery is made within the period specified.

2. **TYPE OF DELIVERY EQUIPMENT:** Concrete shall be delivered in truck mixers or agitator truck (trucks providing mechanical agitation by revolving drums or revolving blades in a stationary drum) operated after time required for thorough mixing of the concrete at the speed designated by the manufacturer as agitating speed.

F. JOB-MIXED CONCRETE: Job-mixed concrete shall be mixed in a drum mixer which shall conform to the concrete paving mixer standards of the Mixer Manufacturers Bureau of the Association General Contractors of America. The mixer shall be capable of combining the aggregates, cement and water into a thoroughly mixed and uniform mass within the specified time and of discharging the material without segregation.

The entire contents of the drum shall be discharged before recharging. The volume of the mixed materials per batch shall not exceed the manufacturer's guaranteed capaCity of the mixer.

G. TIME OF MIXING: The mixing of each batch shall continue for not less than one minute after all materials, except water, are in the mixer. The mixer shall rotate at the rate recommended by its

manufacturer. The mixer shall be provided with a batch-timing device that shall be subject to inspection and adjustment by the inspector.

H. RETEMPERING OF CONCRETE: Retempering of concrete, which has partially hardened, by remixing, with or without water, shall not be permitted.

ITEM 4.0 MEASURING AIR CONTENT: The air content shall be measured in accordance with ASTM Method of Test for Air Content of Freshly Mixed Concrete by the Pressure Method (Designation C-231) or ASTM Method of Test for Air Content of Freshly Mixed Concrete by the Volumetric Method (Designation C -173).

ITEM 5.0 FORMS: Forms may be made of wood or metal and shall have a depth equal to or greater than the prescribed edge of thickness of the pavement. Each section of form shall be straight, free from bends or warps. The method of connections between the form sections shall be such that the joint thus formed is tight and free from movement in any direction. Forms shall be of such cross sections and strength and so secured as to resist tile pressure of the concrete when placed and the impact and vibration of any equipment which they support without springing or settlement.

A. SETTING FORMS: The subgrade under the forms shall be compacted and shaped so that the form when set shall provide the specified elevation. The supply of forms shall be sufficient to permit their remaining in place for sufficient time so when removed the concrete will not be displaced. All forms shall be cleaned and oiled each time they are used.

B. GRADE AND ALIGNMENT: The contractor immediately ahead of concrete placement shall check the alignment and grade elevation of the forms and necessary corrections will be made. Any forms that have been disturbed or subgrade that has become unstable shall be corrected and forms reset and rechecked. Any variations in grade and alignment shall be subject to approval by the inspector, prior to placing the concrete. When slip-form paving machines are used, form work shall be as required by manufacturer.

ITEM 6.0 PLACING CONCRETE: The concrete shall be mixed in quantities required for immediate use and shall be deposited on the subgrade to the required depth and width of the construction lane in successive batches and in a continuous operation without the use of intermediate forms or bulkheads. The concrete shall be placed as uniformly as possible in order to minimize the amount of additional spreading necessary. While being placed, the concrete shall be vibrated and compacted with suitable tools so that the formation of voids or honeycomb pockets is prevented. No concrete shall be placed around manholes or other structures until they have been brought to the required grade and alignment. Additional tamping and compaction will be required after raising manholes.

A. COLD WEATHER CONCRETING: Concrete may be placed when the air temperature in the shade and away from artificial heat is more than thirty-five (35B) degrees Fahrenheit and rising. Concrete shall not be placed when the air temperature in the shade and away from artificial heat is less than forty (40B) degrees Fahrenheit and falling.

B. HOT WEATHER CONCRETING: Except by written authorization, concrete placing shall cease if the temperature of the plastic concrete cannot be maintained at ninety (90B) degrees Fahrenheit or

lower. To facilitate the placement of concrete in hot weather, a retarding chemical admixture Type A or D, in conformance with ASTM C -494, may be used.

ITEM 7.0 CONSOLIDATING AND FINISHING: The pavement shall be struck off and consolidated with a mechanical finishing machine or by hand-finishing methods. When a mechanical finishing machine is used, the concrete shall be struck of at such a height that after consolidation and final finishing, it shall be at the elevation as shown on the plans. The finishing machine shall be provided with a screed that will consolidate the concrete by pressure, vibration or both. The concrete shall be brought to a true and even surface, free from rock pockets. The edge of the screeds along tile curb line may be notched out to allow for sufficient concrete to form tile integral curb. Hand - finishing tools shall be kept available for use in case the finishing machine breaks down. When had finishing is used, the pavement shall be struck off and consolidated by a vibrating screed to the elevation as shown on the plans. When the forward motion of the vibrating screed is stopped, the vibrator shall be shut off; it shall not be allowed to idle on the concrete.

A. **SCRAPING AND STRAIGHT EDGING:** The pavement may be required, by the inspector, where applicable, to be scraped with a straightedge equipped with handles long enough to permit it to be operated from the edge of the pavement, in accordance with Kentucky Department of Transportation specifications. When irregularities are discovered, they shall be corrected by adding or removing concrete. All disturbed places shall be floated with a wooden or metal float not less than three (3) feet long and not less than six (6) inches wide and again straightedged.

B. **EDGING:** Before final finishing is completed and before the concrete has taken its initial set, the edges of the slab and curb shall be carefully finished with an edger, having a radius of 1/3 inch.

C. **FINAL SURFACE FINISH:** A burlap drag or broom finish shall be used as the final finishing method for concrete pavement. The drag shall be at least three (3) feet in which and along enough to cover the entire pavement width. It shall be laid on the surface of the pavement and dragged forward in the direction in which the pavement is being laid. The curb shall have the same final finish as the pavement. The final surface of the concrete pavement and curb shall have a uniform gritty texture, free from excessive harshness and true to the grades and cross sections shown on the plans. The inspector may require changes in the final finishing procedures as required to produce the desired final surface texture.

ITEM 8.0 INTEGRAL CURB: When integral vertical curbs are used along the edges of all street pavement, depressed curbs shall be provided at all driveway entrances and at such other locations as designated by the approved plans. The integral curb shall be constructed with or immediately following the finished operation. Special care shall be taken so that the curb construction does not lag the pavement construction and form a “cold joint” in placing curb concrete, sufficient spading shall be done to secure adequate bond with paving a slab and eliminate all voids in the curb. Curbs shall be formed to the cross section in accordance with Appendix “C”.

ITEM 9.0 CURING: Concrete shall be cured by protecting it against loss of moisture, rapid, temperature change, from rain, flowing water and mechanical injury for a period of not less than seven (7) days from the beginning of the curing operation. Moist curing, waterproof paper, white pigmented liquid membrane compound, or a combination thereof, may be used for curing. Immediately after

finishing operations have been completed, the entire surface of the newly laid concrete shall be covered by the curing medium, which is applicable to local conditions and approved by the inspector.

The edge of the concrete slabs exposed by the removal of forms shall be protected immediately to provide these surfaces with continuous curing treatment equal to the method selected for curing a slab surface and to prevent injury to concrete edges.

The covering material shall be kept free of any substances, which may be detrimental to the surface of the concrete. The initial curing medium shall be effective and shall be applied so as to prevent checking, cracking and the appearance of dry spots in the surface of the concrete. The contractor shall have the equipment needed for adequate curing at hand and ready to install before actual concrete placement begins. In all cases in which the curing medium requires the use of water, the curing shall have prior right to all water supply. Failure to provide sufficient cover material of the type selected, failure to maintain saturation for the entire curing period in the moist-curing methods, lack of water to adequately care for both curing and other requirements or other failures to comply with curing requirements shall be cause for immediate suspension of concreting operations.

A. **MOIST CURING:** Moist curing shall be accomplished by covering of burlap, cotton mats or other approved fabric mat used singly or in combination. Curing mats shall be thoroughly wet when applied and kept continuously wet and in intimate contact with the pavement surface for the duration of the moist curing period. Other fabric mats shall conform in design and shall provide a curing medium at least equal to cotton mats. Cotton mats, other fabric mats, and burlap mats and burlap strips shall be furnished in the widths and lengths, after shrinkage, required to cover the entire width and edges of the pavement lane.

   Mats or burlap shall be lapped at joints between adjacent sheets to prevent drying of this location. Moist curing, when used as initial curing, shall be continued for not less than 24 hours. Type and weight of cotton mats for curing concrete shall conform to ASTM C-440 or AASHO M -73. Burlap strips shall conform to AASHO M -182.

B. **WATERPROOF PAPER AND POLYTHENE SETTING CURING:** The surface of the concrete shall be wetted with a fine spray of water and then covered with the waterproof or sheeting. The paper or sheeting shall be in pieces large enough to cover the entire width and edges of the slab and shall be lapped not less than twelve (12) inches. Paper or sheeting shall be adequately weighted to prevent displacement or billowing due to wind. A continuous bank of earth shall secure paper or sheeting folded down over the side of the pavement widths. Tears or holes appearing in the paper or sheeting during the curing period shall be immediately repaired.

C. **LIQUID MEMBRANE CURING COMPOUND:** Pigmented liquid membrane curing compound shall meet the specifications under ASTM C-309. The curing compound must be applied to cover the surface completely and uniformly at a rate which will achieve the performance requirement specified in AASHO specifications M-148 or ASTM Designation C-309. This method of curing shall be applied immediately behind the final finishing operation or after the initial curing when combinations of methods are used. Failure to provide complete and uniform coverage at the required rate will be cause for discontinuance of this method of curing and the substitution of one of the other approved methods. The compound shall be kept agitated to prevent the pigment from settling. Special care

shall be taken to apply the curing compound to the pavement edges immediately after the forms have been removed.

ITEM 10.0 JOINTS (All Joints shall be constructed as per Appendix "C"): Longitudinal and transverse joints shall be constructed as shown on the plans and construction joints wherever construction may require them.

Longitudinal joints are those joints parallel to the lane of construction. They may be either intermediate center joints or the construction joints between construction lanes.

Expansion joints may be only transverse. They are used only where specifically shown on the plans. Transverse joints shall be contraction, expansion, or construction joints.
The edges of the pavement and those joints where such edging is shown on the plans shall be rounded with an edger having a radius of 1/8 inch. Transverse joints shall be continuous across the entire paved area, including the curb.

A. EXPANSION JOINTS: Expansion joints, where shown on the plans, shall conform to the specifications in Item 2.G.1 of Appendix "A" of these regulations. They shall extend the entire width of the pavement. They shall be of the dimensions and spacing as shown on the plans. The filler shall be held accurately in place during the placing and finishing of the concrete by a bulkhead, a metal channel cap or other approved method. Expansion joints shall be located in pavement sections entering a curve at the PC and PT, at all street intersections a t the point of curvature of the turning radii entering the intersection and at cul- de-sacs or turn arounds at the point of curvature of the first turning radii approaching the turn- around.

Under no circumstances shall any concrete be left above the expansion material or across the joint at any point. Any concrete spanning the ends of the joint next to the forms shall be carefully cut away after the forms are removed.

Before the pavement is opened to traffic, the groove above the filler shall be cleaned and sealed with specified joint sealing material covered under Item 2.G.2 of Appendix "A" of these regulations.

B. TRANSVERSE JOINTS: Transverse Contraction Joints shall be of sawed, formed dummy groove or Premolded strip type. All transverse joints shall be one-fourth (1/4) of the pavement thickness.

The spacing of undoweled contraction joints shall be specified by the design engineer and shall be based on accurate performance records from streets in service. In no case shall the contraction joints be spaced at intervals greater than twenty (20) feet.

If sawed joints are specified on the plans, they shall be sawed early enough to control cracking, but late enough to prevent any damage by blade action in the slab surface and to the concrete immediately adjacent to the joints.

C. CONSTRUCTION JOINTS: Transverse construction joints of the type shown on the plans shall be placed wherever the placing of concrete is suspended for more than thirty (30) minutes. A

transverse construction joint with smooth bars shall be used if the joint occurs at the location of a contraction joint. Deformed tie bars are used if the joint occurs at any other locations.

D. LONGITUDINAL JOINTS: Longitudinal joints shall be placed as shown on the plans. They shall be of the sawed, dummy groove, premolded strip of tied construction type. All longitudinal sawed joints shall conform to Item 10.B of Appendix "A" of these regulations. Joints between construction lanes shall be the tied construction type with keyway and J bars in accordance with joint details in Appendix "C". The depth of longitudinal shall be at least one-fourth (1/4) of the pavement thickness. They shall coincide with lane markings wherever possible and shall be provided between each traffic lane.

E. INTEGRAL CURB JOINTS: In the construction of transverse joints of concrete integral curb pavement, special care must be taken to see that all transverse joint extend continuously through the pavement and curb, except tied transverse construction joints.

ITEM 11.0 TIE BARS: Tie bar, when shown on the plans, shall be of threaded J-bar type and of the dimensions and at the spacing specified according to Appendix "C".

ITEM 12.0 JOINT SEALER: After the curing period, all sawed and dummy groove joints in the pavement shall be cleaned and sealed with an acceptable sealer, as specified by the Kentucky Department of Transportation Specifications. All joint sawing residue, dirt, and curing membrane shall be removed prior to sealing. Any excess material should be removed from the pavement surface as soon after sealing as possible.

ITEM 13.0 STRUCTURES ENCOUNTERED IN THE PAVED AREA:

A. MANHOLES AND CATCH BASINS: All manholes and catch basins encountered in the areas to be paved shall be raised or lowered to the surface of the new pavement. Catch basins may be separated from the pavement and curb by boxing out around basin.

When a joint falls within five (5) feet of or contacts basins, manholes, or other structures, one or more panels either side of opening shall be shortened to permit joint to fall on round structures and at a corner of rectangular structures as shown in Appendix "C" of these regulations.

ITEM 14.0 PROTECTION AND OPENING TO TRAFFIC: Traffic shall be excluded from the pavement by erecting and maintaining barricades and signs until the concrete is at least fourteen (14) days old or has attained a compressive strength of 3,500 pounds per square inch and/or 550 pounds per square inch flexural strength. This traffic restriction shall apply to the contractor's construction equipment and vehicles as well as general traffic. As soon as curing and sealing are completed, the contractor shall clean up the pavement free from all debris.

ITEM 15.0 CURB, GUTTER, SIDEWALK, AND DRIVEWAYS: Construction of curb, gutter, sidewalk, and driveways shall require the same care as the pavement. The preceding requirements shall apply, where pertinent, to the construction of curb, gutter, sidewalks, and driveways within the right-of-way. In addition, sidewalks or driveways shall be constructed so that the transverse joint spacing shall

be equal to the width of the sidewalk or driveway, but in no case shall the transverse joint spacing for driveways exceed twelve (12) feet and not greater than five (5) feet for sidewalk spacing. Sidewalk and driveways within the right-of-way, shall be constructed with a pavement thickness of at least four (4) and six (6) inches, respectively (see Appendix "C " for typical section details).

ITEM 16.0 PAVEMENT THICKNESS: Pavement thickness for each type of street classification shall be as provided in Table 3 and reinforcing pavement mesh shall not be required. Streets that are subjected to exceptionally heavy truck traffic shall require a more complete detailed analysis by the subdivider's engineer and approved by the Planning Commission.
All arterial streets shall be designed in accordance with the requirements of the Kentucky Department of Transportation.

TABLE 3

MINIMUM PAVEMENT THICKNESS FOR STREETS-
PORTLAND CEMENT CONCRETE*

STREET CLASSIFICATION**	PAVEMENT THICKNESS (INCHES)
LOCAL STREETS INCLUDING COURTS AND CUL-DE-SACS	6
SUBCOLLECTOR	7
COLLECTOR	8

Street shall be designed according to the typical street section details in Appendix " C".

Where streets are to serve industrial or commercial areas, the pavement design shall be based on a study prepared by the subdivider's engineer projecting the type of vehicles using the street and traffic volumes approved by the Planning Commission.

ITEM 17.0 SURFACE TOLERANCES AND TESTING SURFACE: The contractor shall utilize proper and adequate methods during and after the construction of concrete pavements to prevent unacceptable slumping and to correct unavoidable slum ping of the pavement edges due to all causes, in accordance with Section 501 of the Kentucky Department of Transportation standard specifications.

APPENDIX B

ASPHALT PAVEMENT FOR STREET AND DRIVEWAY CONSTRUCTION

ASPHALT PAVEMENT FOR STREET AND DRIVEWAY CONSTRUCTION

The work covered by these specifications consists of furnishing all labor, equipment and materials and in performing all operations in connection with the construction of asphalt concrete pavement for streets and alleys in accordance with these specifications and the applicable drawings.

ITEM 1.0 GRADING: This item shall consist of all grading above or below subgrade elevations, of whatever nature, required to bring the street to the proper subgrade elevation, including necessary excavation for curb, gutter, sidewalk, construction of embankments, excavation and proper sloping of all cuts, and other work incidental thereto .

A. EXCAVATIONS: All excavations shall be made to approximate subgrade elevations and shall be true to grade. No excavation shall be made below subgrade elevation except to remove a spongy material, vegetation matter, or other material as ordered or approved by the inspector.

B. EXCAVATION BELOW SUBGRADE: Whenever excavation below subgrade elevation to remove spongy material, vegetation matter, or other material is required, the contractor shall remove same in a satisfactory manner, and shall replace it with satisfactory material in layers not to exceed twelve (12) inches in thickness and shall thoroughly compact each layer before the next layer is placed.

C. CONSTRUCTION OF EMBANKMENTS: All topsoil and heavy root system shall be removed to eliminate all vegetation from the area upon which the embankment is to be constructed. Soil so removed shall not be used in construction of the embankment.

Embankment shall be constructed, of approved materials, to approximate subgrade elevation in layers to not exceed eight (8) inches in thickness and extending the full width of the embankment. Each layer shall be compacted to not less than ninety-five (95) percent of the density determined from the "Standard Test for Moisture-Density Relationship" (AASHO Designation T-99) in areas involving structures and public improvements including slopes greater than 3:1 .

D. SUBGRADE: The subgrade is defined as the top one (1) foot of the soil profile at finished grade prior to placing the pavement. This top one (1) foot of soil will consist of (a) compacted fill placed for embankments as outlined in Item C; (b) undisturbed soils in the transitional areas from cut to fill immediately below the topsoil; (c) undisturbed soils at depths greater than three (3) feet below the original ground surface in cut areas. The top one foot of subgrade shall be compacted to 98 percent of maximum density as determined by the Standard Proctor Moisture Density Test (ASTM D698-78 or AASHO T-99) or 90 percent of maximum density as determined by the modified Proctor Maximum Density Test (ASTM DI 557-78 or AASH O T-180) within two (2) percent of optimum moisture content on the dry side of the curve or four (4) percent of optimum moisture content on the wet side of the curve immediately prior to placing the pavement. In transitional areas from cut to fill, the soils have been subject to seasonal changes of freezing and thawing and wetting and drying. These soils will exist at moisture contents well above optimum moisture content and at densities on the order of 60 to 80 percent of maximum density (ASTM D 698-78). These soils shall be scarified,

aerated and dried in order to obtain the specified percent compaction for subgrade. Soils in cut areas, three (3) feet below original grade, will exist at moisture contents above optimum moisture content and at densities on the order of 90 percent of maximum density (ASTM D698-78). These soils shall be scarified, aerated and dried in order to obtain the specified percent compaction for subgrade.

Any soft or yielding areas, resulting from high moisture content that are encountered at the time of construction shall be scarified, aerated, and dried to reduce the moisture content nearer to optimum moisture content, then recompacted to the specified density.

The subgrade shall be shaped to plan elevation and cross section. Immediately prior to placing the concrete, the subgrade shall be checked for conformity with the cross section shown on the plans by means of an approved template on the side forms. If necessary, the materials shall be removed or added to bring all portions of the subgrade to correct elevations. The subgrade shall be thoroughly compacted and again checked with the template. Concrete shall not be placed on any art of the subgrade, which has not been checked for correct elevation.
The subgrade shall be clean of loose or wet material prior to placing concrete.

Prior to placing the concrete the Contractor shall proof roll the compacted subgrade with a fully loaded single axle truck. The Inspector shall observe the proof rolling for consistency. Areas, which are subject to excessive pumping or rutting, shall be reworked and recompacted as described above. All subgrade testing shall be made not more than 48 hours prior to placement of pavement, unless extreme weather conditions dictate - retesting rain, freezing temperature, excessive temperature, etc. The appropriate inspector shall be contacted not less than twelve (12) hours prior to placement of materials.

E. EQUIPMENT FOR COMPACTION OF EMBANKMENT AND SUBGRADE:
Any compaction equipment capable of uniformly producing the required embankment and subgrade densities, without lamination of, or within, successive layers, will be permitted. All compaction equipment shall be in good condition and shall be operated efficiently to assure uniform compaction.

F. SUBGRADE FOR CURBS, GUTTERS, SIDEWALKS, AND DRIVEWAYS:
Subgrade areas to be occupied by curbs, gutters, sidewalks, and driveways shall be excavated, backfilled, as required, and compacted to establish grade. This work shall be done with particular care in accordance with all requirements herein.

G. EQUIPMENT OPERATED ON THE STREET S: The contractor shall be permitted operate only pneumatic-tired equipment over any paved street surfaces and shall be responsible for correction of any damage to street surfaces in any manner resulting from the contractor's operations.

H. PROTECTION OF UTILITY LINES: The contractor shall at all times take proper precautions for the protection of utility lines, the presence of which are known, or can be determined by the examination of appropriate maps of applicable agencies and the City.

I. SOILS WITH LESS THAN SIX (6) CBR'S: Soils and subgrades with CBR's less than six (6) must be stabilized in an acceptable manner as per City of Berea Guidelines for Pavement

Design.

ITEM 2.0 PREPARATION OF EXISTING GRANULAR BASE COURSES FOR SURFACING:

A. DESCRIPTION AND GENERAL REQUIREMENTS: In areas where granular base course has been placed as a previous stage of street or road construction, the contractor shall blade, shape and compact the base course in conformance with the required dimensions, line, guide, and cross section to permit completion of the paving work. When directed by the inspector, additional base course aggregate shall be provided or excess aggregate removed and disposed of by the contractor as to provide conformance with the required roadway section.

B. THICKNESS OF SURFACING REQUIRED FOR EXISTING GRANULAR BASE COURSES: The existing thickness of granular base comprises a portion of the required Design Thickness as specified in Item 4.0B .

ITEM 3.0 ASPHALT PAVEMENT:

A. DESCRIPTION AND GENERAL REQUIREMENTS: This item shall consist of furnishing all materials and performing all construction procedures required to build an asphalt pavement on prepared and approved subgrade, conforming to the requirements of these specifications and to the pavement designs shown on the approved plans. It may include any, or all, but is not necessarily limited to, materials and methods specified under this item (Item 3).

Asphalt pavement shall consist of an asphalt concrete surface course, or courses, constructed on a base course, or courses and/or subbase course designed in compliance with the requirements of Item 4.0.B of Appendix "B".

Successive layers of the pavement shall be offset from the edge of the underlying layer a distance equal to the course thickness of the lower layer except when abutting existing construction. When the asphalt layers of the pavement abuts a building foundation, barrier curb or similar vertical surface, the abutting surface shall be heavily painted with asphalt prior to construction of the asphalt course. The surface course shall be finished one-fourth (1/4) inch above adjacent flush construction to permit proper compaction.

B. MATERIALS AND CONSTRUCTION REQUIREMENTS:

1. **ASPHALT CONCRETE SURFACE COURSE:** Asphalt Concrete Surface Course materials and construction shall conform to the current requirements of the Kentucky Department of Transportation, Bureau of Highways, for Asphalt Concrete Surface (Type B and Binder (Section 401, 402). Surface course mixture composition shall conform to the requirements Surface Type B and Binder as set forth in Table 5. Minimum Asphalt Concrete Surface Course Thickness shall be as stated in Table 6 of these regulations.

2. **ASPHALT CONCRETE BASE COURSE:** Asphalt Concrete Base Course materials and construction shall conform to the current requirements of the Kentucky Department of Transportation, Bureau of Highways, Specifications for Asphalt Concrete Base Course

(Section 401, 403). Composition requirements of the mixture shall conform to the gradation limits for Asphalt Concrete Base Course 1, set forth in Table 5. Asphalt content used shall fall within the range shown and shall be approved by the inspector.

3. **CRUSHED AGGREGATE BASE COURSE:**

   (A) **DESCRIPTION:** Crushed Aggregate Base Course, when provided for in the approved structural design of the pavement, shall consist of a granular layer constructed on prepared subgrade or subbase in accordance with these specifications and in conformity with the approved dimensions, lines, grades, and cross sections.

   (B) **MATERIALS AND CONSTRUCTION METHODS:** Crushed Aggregate Base course shall conform to all the current requirements for materials and construction methods of the Kentucky Department of Transportation for Dense Graded Aggregate Base Course as per Section 303.

4. **GRANULAR SUBBASE COURSE:**

   (A) **DESCRIPTION:** Subbase, when provided for in the approved structural design of the pavement, shall consist of a granular layer conforming to the following material and construction specifications.

   (B) **MATERIALS AND CONSTRICTION METHODS:** Crushed Aggregate Subbase Course shall conform to all the current requirements for materials and construction methods of the Kentucky Department of Transportation for Dense Graded Aggregate Subbase Course as per Section 303.

5. **ASPHALT PRIME COAT:** Asphalt Prime Coat shall be applied to the surface of the surface of granular courses upon which asphalt base or surface courses will be constructed. Asphalt Prime shall conform to the Kentucky Department of Transportation requirements for Cutback Asphalt Emulsion Primer Type L as per Section 407. Prime shall be applied to the surface of granular base course at a rate of 0.25 to 0.50 gallons per square yard, as directed by the Inspector, in conformance with requirements of the referred to specification.

6. **ASPHALT TACK COAT:** Tack Coat shall consist of SS-1 h, meeting the current requirements of the Kentucky Department of Transportation, it shall, when directed by inspector, be diluted with equal parts of water. Application equipment and procedure shall conform to the requirements of the Kentucky Department of Transportation for Tack Coats as per Section 407. Tack Coat shall be applied to the surface of asphalt courses that have become dusty or dry from traffic use at a rate of 0.10 gallon per square yard of the diluted SS-1h before the subsequent course is constructed or in other circumstances when the Inspector so directs.

ITEM 4.0 DESIGN OF ASPHALT PAVEMENT STRUCTURE:

A. **DESCRIPTION:** Asphalt pavement structures for subdivision streets shall be designed in conformance with the requirements of this specification. Thickness of the total pavement and of component layers shall be determined on the basis of Street Classification.

B. **PAVEMENT THICKNESS REQUIREMENTS:** Thickness of component layers of the pavement for streets within the right-of-way and of the total pavement structure shall be determined as per Table 6. Where streets are to serve Industrial or Commercial areas, the pavement design shall be based on a study prepared by the subdivider's engineer projecting the type of vehicles using said streets and traffic volumes, and approved by the Planning Commission's duly authorized representative.

ITEM 5.0 ADJU STING MAN HOLE TOPS:

A. **DESCRIPTION:** The contractor shall raise or lower existing manhole tops to coincide with the finished grade elevation of the paving.

TABLE 5.
COMPOSITION LIMITS FOR ASPHALT MIXTURES

PERCENT PASSING BY SIEVE LEVEL	ASPHALT CONCRETE BASE TYPE I	BINDER	SURFACE TYPE B
1-1/2	100	----------	----------
1"	85-100	100	----------
3/4 "	----------	80 - 100	----------
½"	50-80	----------	100
3/8 "	----------	54-76	85-100
No. 4	30-50	37-57	60-80
No. 8	25-45	25-45	40-60
No. 16	15-34	15-35	25-50
No. 50	5-20	5-20	5-20
No. 100	3-10	3-10	3-12
No. 200	----------	----------	2 - 6
% Asphalt AC 20	3.5 - 6.0	4.0 - 7.0	4.0 - 8.0

TABLE 6
PAVEMENT DESIGN

The Engineer shall design the base and pavement thickness using the procedures in the AASHTO Pavement Design Guide or as per Kentucky Transportation Cabinet requirements. The Engineer shall compare the results of the pavement design to the thickness in the table below. In no case shall the thickness of the base and asphalt course be less than those shown in the table below. CBR Values shall be used by the Engineer in designing required pavement thickness.
Soil and rock testing are to be performed in accordance with ASTM, AASHTO or Kentucky Transportation Cabinet test methods. Bag samples consisting of soils which will be used to construct roadway/street fills, and of soils near subgrade elevations, shall be subject to particle size analyses, specific gravity, Atterberg limits, standard Proctor and CBR testing. These parameters shall be used during engineering evaluations to provide fill compaction and embankment construction criteria.

Soil profile borings shall be performed at maximum 300-foot center-to-center spacing along the roadway alignment through both cut and fill sections. If the roadway length is less than 300 feet, then a minimum of two (2) profile borings shall be taken at equal distance along the roadway alignment.

All soils with a CBR of less than six (6) will require soil stabilization.

An acceptable method of soil stabilization is to remove 12 -18 inches of the weak material and replace it with 12-18 inches of No. 2 stone, with a 1-inch layer of DGA or a geotextile between the soil and the No. 2's. Chemical soil stabilization is also acceptable.

Minimum Pavement Thicknesses for Soils with CBR's of Six or Greater Arterials and Non-residential Streets

1.5" Surface
9.0" Base
8.0" DGA

Collector/Connecter Streets

1.5" Surface
6.0" Base
8.0 " DGA

Frontage/Service Roads, Local (Minor)Streets and Cul-de-Sacs

1.5" Surface
3" Base
10" DGA

Concrete pavements will require a specific design in each and every case and the above tables shall not apply.

MATERIALS SPECIFICATIONS AND CONSTRUCTION SPECIFICATIONS

Material specifications, construction methods, materials and procedures for all aspects of construction, unless noted elsewhere in these Regulations, shall conform to the descriptions and details as stated in the latest edition of the Kentucky Transportation Cabinet/Department of Highways "Standard Specifications for Roads and Bridge Construction". Categories may include but are not limited to:

A. Earthwork
B. Aggregate base courses
C. Asphalt pavements
D. PCC pavement and non-structural concrete construction
E. Structures and concrete
F. Drainage, traffic and roadside construction
G. Materials details

APPENDIX C

TYPICAL DETAIL SECTIONS FOR STREETS, CURB AND GUTTER, CATCH BASINS, AND OTHER DESIGN

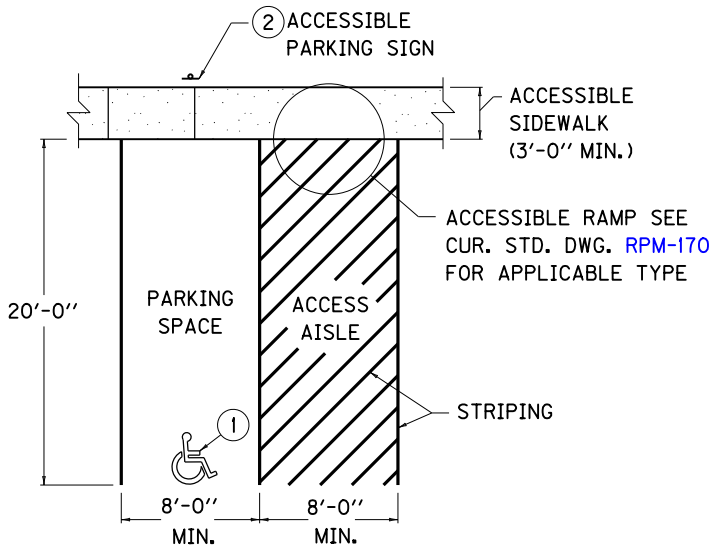

PLAN VIEW OF ONE ACCESSIBLE PARKING SPACE

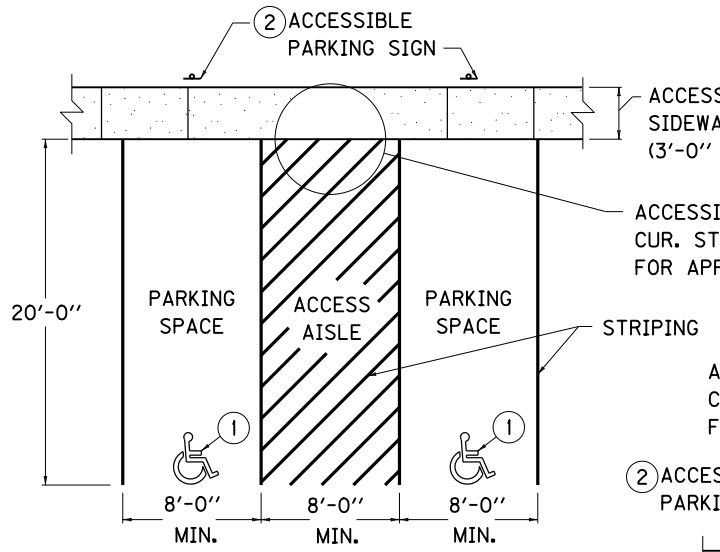

PLAN VIEW OF TWO ACCESSIBLE PARKING SPACES

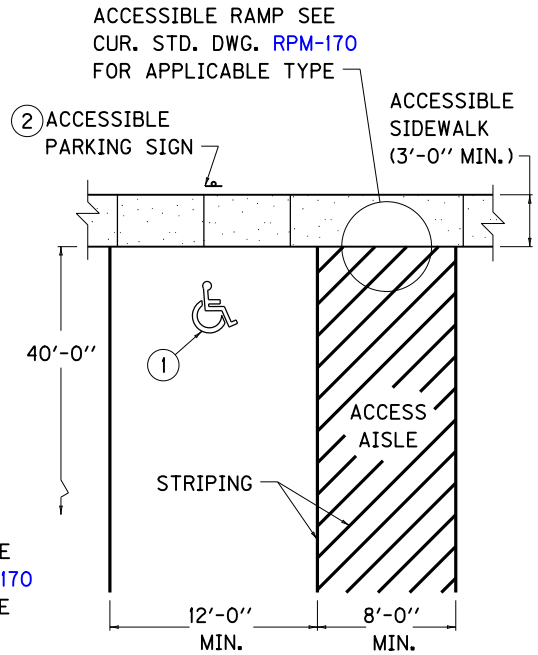

PLAN VIEW OF BUS ACCESSIBLE PARKING SPACE

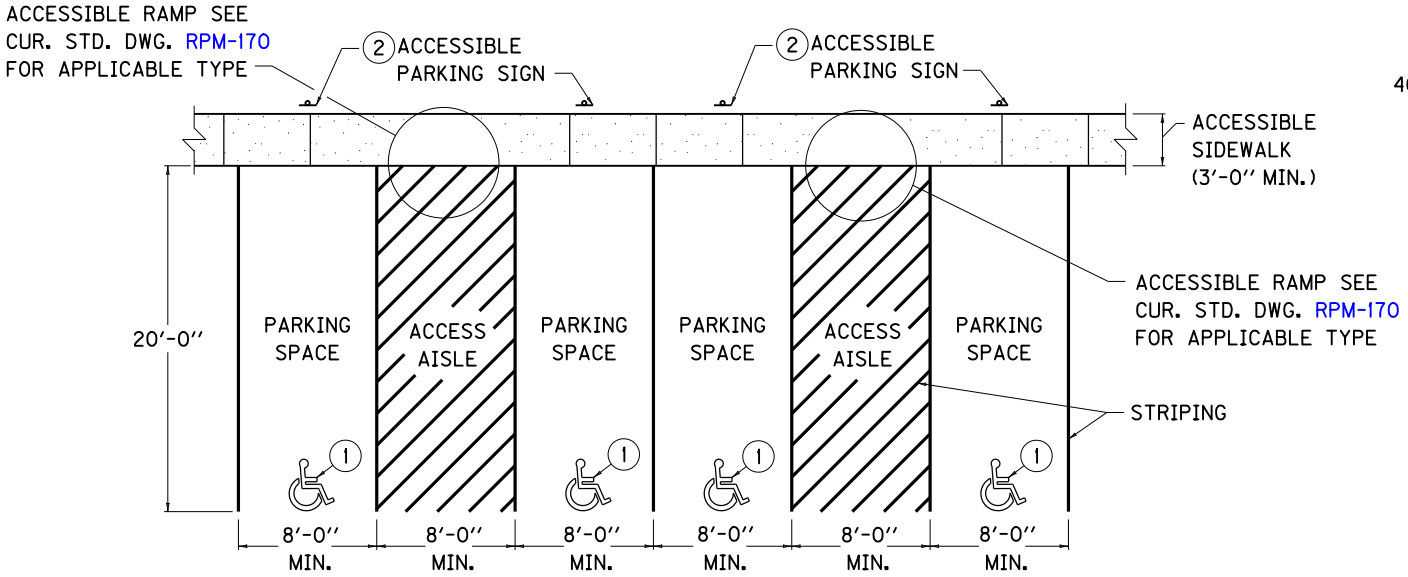

PLAN VIEW OF MULTIPLE ACCESSIBLE PARKING SPACES

USE WITH CUR. STD. DWG. RPM-170

NOTES

1. INTERNATIONAL SYMBOL OF ACCESSIBILITY.
2. INTERNATIONAL SYMBOL OF ACCESSIBILITY WITH "VAN-ACCESSIBLE" SIGN MOUNTED BELOW.
3. SEE ELSEWHERE IN THE PLANS FOR APPLICABLE ACCESSIBLE SIGNING DETAILS.
4. SEE ELSEWHERE IN THE PLANS FOR STRIPING DETAILS.

KENTUCKY DEPARTMENT OF HIGHWAYS

ACCESSIBLE PARKING SPACE DETAILS

STANDARD DRAWING NO. RPX-100-02

SUBMITTED John B. Scholtens, DIRECTOR DIVISION OF DESIGN — 12-1-99 DATE

APPROVED F. M. Howell, STATE HIGHWAY ENGINEER — 12-1-99 DATE

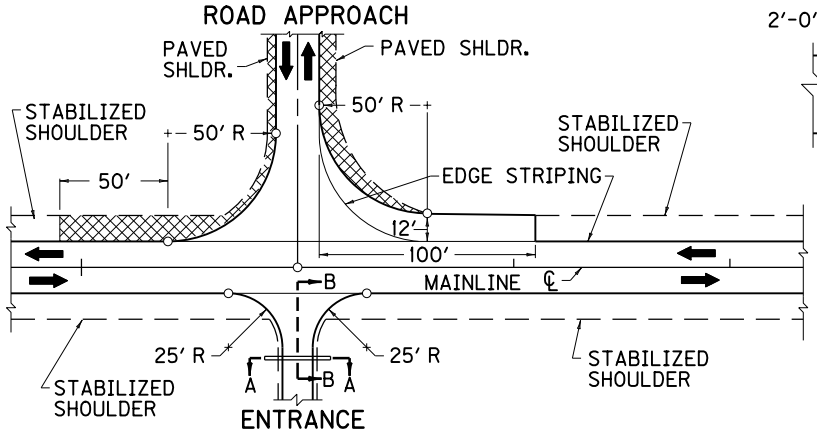

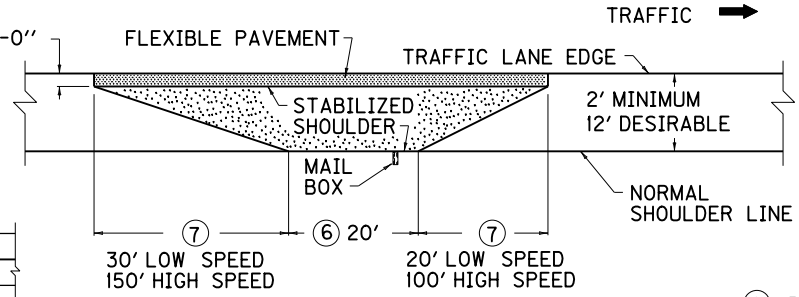

MAIL BOX TURNOUT

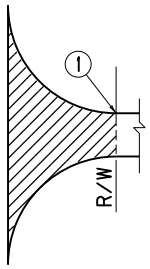

1 PAVE TO R/W LINE OR END OF RADIUS, WHICHEVER IS FURTHER FROM THE EDGE OF TRAFFIC LANE.

ROAD AND STREET APPROACHES

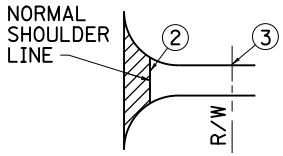

2 PAVED TO SHOULDER LINE

3 SURFACE TO R/W LINE OR TOUCHDOWN WITH TRAFFIC BOUND BASE.

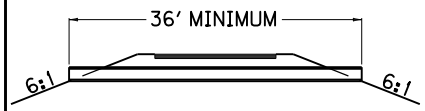

SECTION A-A

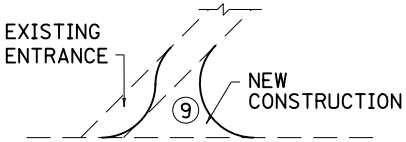

PLAN VIEW

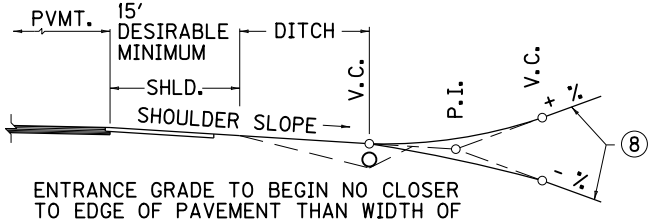

ENTRANCE GRADE TO BEGIN NO CLOSER TO EDGE OF PAVEMENT THAN WIDTH OF SHOULDER PLUS DITCH.

8 MAXIMUM GRADE FOR ENTRANCES 50' OR GREATER IN LENGTH:
MOUNTAINOUS TERRAIN - 20%
ROLLING TERRAIN - 16%
FLAT TERRAIN - 12%

SECTION B-B

ENTRANCE
(RESIDENTIAL AND COMMERICAL)

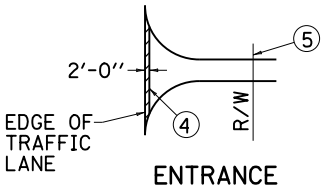

ENTRANCE
(FARM FIELD)

4 PAVE AS SHOWN WITH FLEXIBLE PAVEMENT.

5 SURFACE TO R/W LINE WITH TRAFFIC BOUND BASE.

~ APPROACHES AND ENTRANCES ~

ROAD APPROACH ILLUSTRATION IS FOR MAINLINE ROAD, ADT 400 OR GREATER. PAVED SHOULDER PORTION SHOWN SHALL ONLY BE APPLICABLE WHERE THE MAINLINE SPECIFIES STABILIZED OR PAVED SHOULDERS. IF THE MAINLINE SHOULDER IS PAVED, THIS SHOULDER PORTION SHALL ALSO BE PAVED.

WHEN THE MAINLINE ADT IS UNDER 400, USE A 25' RADIUS WITH NO DECELERATION WIDTH PROVIDED.

THE PAVEMENT ON ENTRANCES AND APPROACHES THAT IS DISTURBED DURING NEW CONSTRUCTION OPERATIONS SHALL BE REPLACED WITH A PAVEMENT EQUIVALENT TO THE EXISTING PAVEMENT, REGARDLESS OF THE SURFACE MATERIAL USED ELSEWHERE. THE PAVEMENT DESIGN SHALL BE AS SHOWN ON THE PLANS OR AS APPROVED BY THE ENGINEER.

THE RADII ON COUNTY OR SECONDARY ROADS SHALL NOT BE LESS THAN 25' MEASURED TO THE INSIDE EDGE OF THE SURFACE. EACH ADDITIONAL FOOT OF SURFACE WIDTH WILL REQUIRE AN ADDITIONAL FOOT OF PIPE.

PIPE ILLUSTRATION IS BASED ON THE USE OF 15" PIPE. LARGER SIZES MAY BE INSTALLED WITH APPROPRIATE MODIFICATIONS. PIPES SMALLER THAN 15" DIAMETER ARE NOT TO BE USED EXCEPT IN SPECIAL CASES, WHEN SPECIFICALLY AUTHORIZED.

IN CUT SECTION, SIGHT DISTANCE SHALL BE PROVIDED ON ENTRANCES AND APPROACHES BY DAYLIGHTING THE CUT FROM THE POINTS WHERE THE RADII BEGINS, TO POINTS NOT LESS THAN 100' ON EACH OF THE INTERSECTING ROADWAY.

9 IF FEASIBLE, ALL APPROACHES AND ENTRANCES SHALL INTERSECT SHOULDER LINE AT RIGHT ANGLES. IF NOT AT RIGHT ANGLES, PIPE LENGTH SHALL BE INCREASED TO PROVIDE ACCURATE RADIUS.

MINIMUM PAVED AREAS FOR ENTRANCES AND APPROACHES. THESE PAVED AREAS MAY BE EXTENDED TO TOUCHDOWN OR TIE-DOWN POINT PROVIDED THE EXISTING IS PAVED.

~ MAIL BOX TURNOUT ~

THE 2'-0" WIDE FLEXIBLE PAVEMENT FOR THE LENGTH AS SHOWN, OR AS DETERMINED BY THE ENGINEER, SHALL BE APPLIED TO ALL MAIL BOX TURNOUTS. THE PAVEMENT DESIGN SHALL BE AS SHOWN ON THE PLANS OR AS APPROVED BY THE ENGINEER

FOR STABILIZED SHOULDERS, THIS AREA SHALL RECEIVE THE SAME TREATMENT AS THAT FOR ADJOINING STABILIZED SHOULDERS. FOR EARTH SHOULDERS THIS AREA SHALL RECEIVE 3" TO 5" OF COMPACTED DENSE GRADED AGGREGATE BASE, BANK GRAVEL, OR TRAFFIC BOUND BASE.

7 HIGH SPEED EQUALS 50 MILES PER HOUR OR GREATER. LOW SPEED EQUALS LESS THAN 50 MILES PER HOUR.

6 ADD 2'-0" FOR EACH ADDITIONAL MAIL BOX.

KENTUCKY
DEPARTMENT OF HIGHWAYS

APPROACHES, ENTRANCES AND MAIL BOX TURNOUT

STANDARD DRAWING NO. RPM-110-06

SUBMITTED _____ DIRECTOR DIVISION OF DESIGN — 12-2-11 DATE

APPROVED _____ STATE HIGHWAY ENGINEER — 12-2-11 DATE

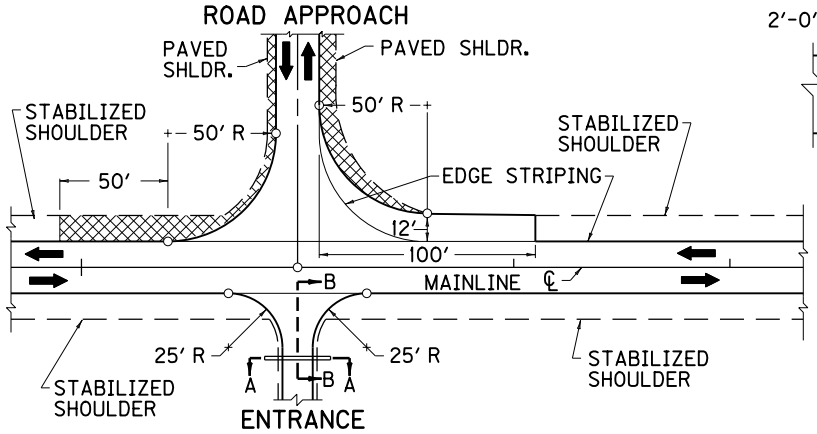

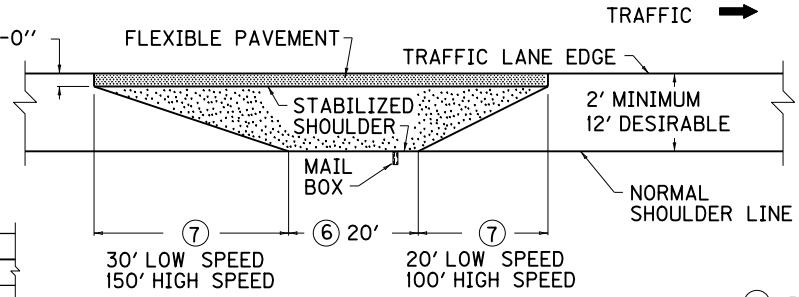

MAIL BOX TURNOUT

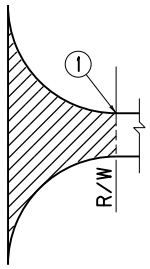

1 PAVE TO R/W LINE OR END OF RADIUS, WHICHEVER IS FURTHER FROM THE EDGE OF TRAFFIC LANE.

ROAD AND STREET APPROACHES

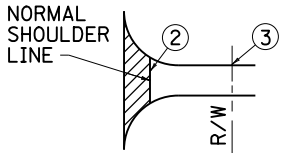

2 PAVED TO SHOULDER LINE

3 SURFACE TO R/W LINE OR TOUCHDOWN WITH TRAFFIC BOUND BASE.

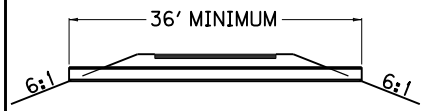

SECTION A-A

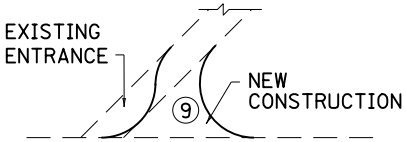

PLAN VIEW

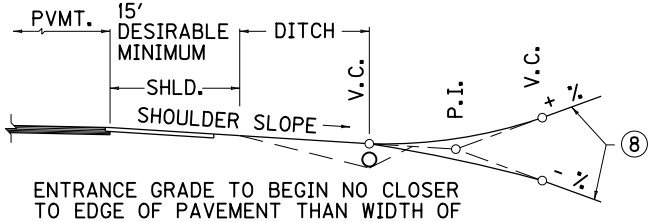

ENTRANCE GRADE TO BEGIN NO CLOSER TO EDGE OF PAVEMENT THAN WIDTH OF SHOULDER PLUS DITCH.

8 MAXIMUM GRADE FOR ENTRANCES 50' OR GREATER IN LENGTH:
MOUNTAINOUS TERRAIN - 20%
ROLLING TERRAIN - 16%
FLAT TERRAIN - 12%

SECTION B-B

ENTRANCE
(RESIDENTIAL AND COMMERICAL)

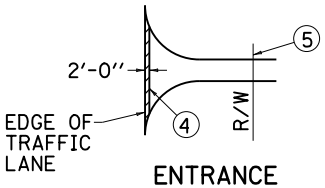

ENTRANCE
(FARM FIELD)

4 PAVE AS SHOWN WITH FLEXIBLE PAVEMENT.

5 SURFACE TO R/W LINE WITH TRAFFIC BOUND BASE.

~ APPROACHES AND ENTRANCES ~

ROAD APPROACH ILLUSTRATION IS FOR MAINLINE ROAD, ADT 400 OR GREATER. PAVED SHOULDER PORTION SHOWN SHALL ONLY BE APPLICABLE WHERE THE MAINLINE SPECIFIES STABILIZED OR PAVED SHOULDERS. IF THE MAINLINE SHOULDER IS PAVED, THIS SHOULDER PORTION SHALL ALSO BE PAVED.

WHEN THE MAINLINE ADT IS UNDER 400, USE A 25' RADIUS WITH NO DECELERATION WIDTH PROVIDED.

THE PAVEMENT ON ENTRANCES AND APPROACHES THAT IS DISTURBED DURING NEW CONSTRUCTION OPERATIONS SHALL BE REPLACED WITH A PAVEMENT EQUIVALENT TO THE EXISTING PAVEMENT, REGARDLESS OF THE SURFACE MATERIAL USED ELSEWHERE. THE PAVEMENT DESIGN SHALL BE AS SHOWN ON THE PLANS OR AS APPROVED BY THE ENGINEER.

THE RADII ON COUNTY OR SECONDARY ROADS SHALL NOT BE LESS THAN 25' MEASURED TO THE INSIDE EDGE OF THE SURFACE. EACH ADDITIONAL FOOT OF SURFACE WIDTH WILL REQUIRE AN ADDITIONAL FOOT OF PIPE.

PIPE ILLUSTRATION IS BASED ON THE USE OF 15" PIPE. LARGER SIZES MAY BE INSTALLED WITH APPROPRIATE MODIFICATIONS. PIPES SMALLER THAN 15" DIAMETER ARE NOT TO BE USED EXCEPT IN SPECIAL CASES, WHEN SPECIFICALLY AUTHORIZED.

IN CUT SECTION, SIGHT DISTANCE SHALL BE PROVIDED ON ENTRANCES AND APPROACHES BY DAYLIGHTING THE CUT FROM THE POINTS WHERE THE RADII BEGINS, TO POINTS NOT LESS THAN 100' ON EACH OF THE INTERSECTING ROADWAY.

9 IF FEASIBLE, ALL APPROACHES AND ENTRANCES SHALL INTERSECT SHOULDER LINE AT RIGHT ANGLES. IF NOT AT RIGHT ANGLES, PIPE LENGTH SHALL BE INCREASED TO PROVIDE ACCURATE RADIUS.

MINIMUM PAVED AREAS FOR ENTRANCES AND APPROACHES. THESE PAVED AREAS MAY BE EXTENDED TO TOUCHDOWN OR TIE-DOWN POINT PROVIDED THE EXISTING IS PAVED.

~ MAIL BOX TURNOUT ~

THE 2'-0" WIDE FLEXIBLE PAVEMENT FOR THE LENGTH AS SHOWN, OR AS DETERMINED BY THE ENGINEER, SHALL BE APPLIED TO ALL MAIL BOX TURNOUTS. THE PAVEMENT DESIGN SHALL BE AS SHOWN ON THE PLANS OR AS APPROVED BY THE ENGINEER

FOR STABILIZED SHOULDERS, THIS AREA SHALL RECEIVE THE SAME TREATMENT AS THAT FOR ADJOINING STABILIZED SHOULDERS. FOR EARTH SHOULDERS THIS AREA SHALL RECEIVE 3" TO 5" OF COMPACTED DENSE GRADED AGGREGATE BASE, BANK GRAVEL, OR TRAFFIC BOUND BASE.

7 HIGH SPEED EQUALS 50 MILES PER HOUR OR GREATER. LOW SPEED EQUALS LESS THAN 50 MILES PER HOUR.

6 ADD 2'-0" FOR EACH ADDITIONAL MAIL BOX.

KENTUCKY
DEPARTMENT OF HIGHWAYS

APPROACHES, ENTRANCES AND MAIL BOX TURNOUT

STANDARD DRAWING NO. RPM-110-06

SUBMITTED _____ DIRECTOR DIVISION OF DESIGN — 12-2-11 DATE

APPROVED _____ STATE HIGHWAY ENGINEER — 12-2-11 DATE

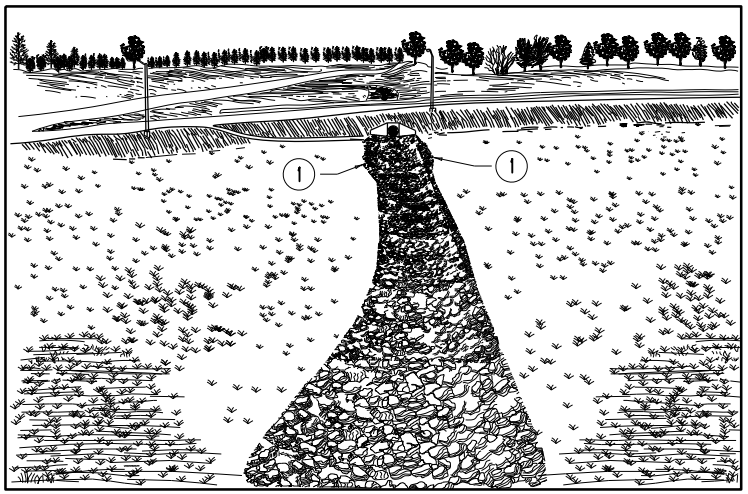

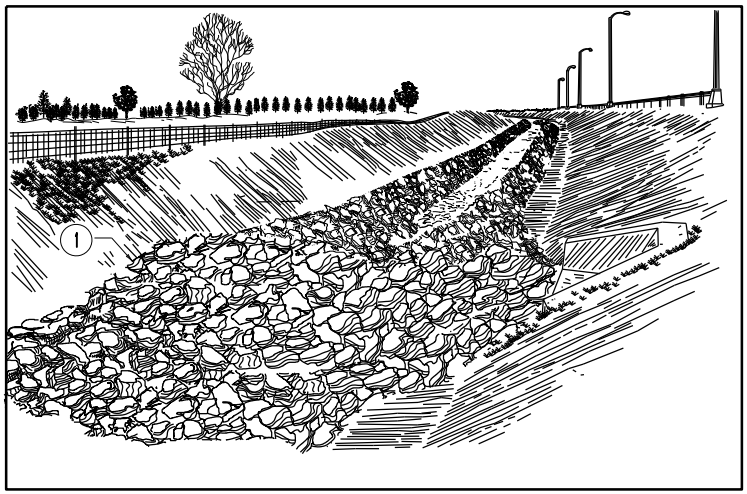

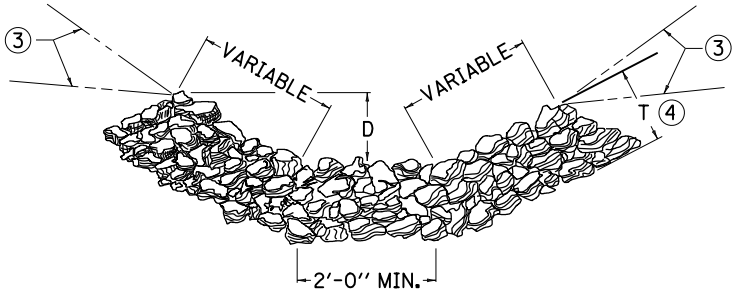

TYPICAL SECTION

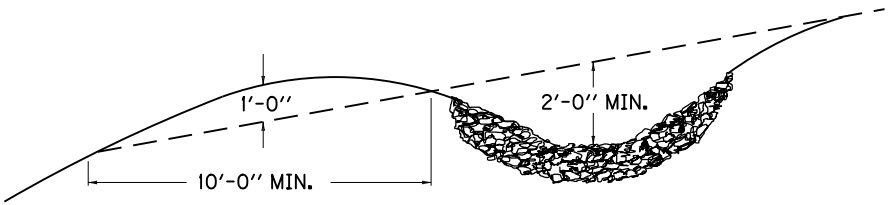

TYPICAL INTERCEPTOR DITCH

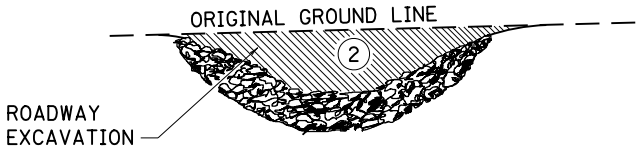

NOTES

CHANNEL LINING WILL BE PAID FOR AT THE CONTRACT UNIT PRICE PER TON FOR EACH CLASS.
CHANNEL LINING WILL NOT BE REQUIRED IN THE BOTTOM OF THE DITCH WHERE SOLID ROCK IS ENCOUNTERED.
CHANNEL LINING ESTIMATED ON THE BASIS OF 0.50 TON PER SQ. YD. PER FOOT OF DEPTH.

1. WIDEN CHANNEL LINING NEAR OUTLET END OF STRUCTURE AS DIRECTED BY THE ENGINEER.
2. FROM THE TOP OF THE LINING TO THE ORIGINAL GROUNDLINE.
3. ALTERNATE LOCATION OF GROUNDLINE.
4. 15" MIN. CLASS II, OR 24" MIN. CLASS III.
5. D = DEPTH TO PROTECT, T = THICKNESS, (SEE PLAN NOTES FOR THESE VALUES)

KENTUCKY
DEPARTMENT OF HIGHWAYS

CHANNEL LINING
CLASS II AND III

STANDARD DRAWING NO. RDD-040-04

SUBMITTED John B. Lochstine — DIRECTOR DIVISION OF DESIGN — 12-1-99 DATE

APPROVED J. M. Yowell — STATE HIGHWAY ENGINEER — 12-1-99 DATE

~ NOTES ~

1. ROADWAY EXCAVATION SHALL BE PAID FROM THE TOP OF LINING TO THE ORIGINAL GROUND LINE.
2. ANCHORS REQUIRED WHEN LINING IS PLACED ON 5% GRADE OR GREATER.
3. SECURE THE LACING WIRE AT THE CORNER OF THE BASKET BY LOOPING AND TWISTING, CONTINUE LACING THROUGHOUT WITH DOUBLE LOOPS AT APPROXIMATELY 5'' INTERVALS. EACH UNIT SHALL CONSIST OF LININGS SUPPLIED IN WIDTHS OF 6'-0'' AS SHOWN AND LENGTHS IN MULTIPLES OF 3'-0''. EACH UNIT SHALL BE SUBDIVIDED INTO COMPARTMENTS A MAXIMUM OF 3'-0'' LONG.
4. AGGREGATE ESTIMATED ON THE BASIS OF 0.50 TON PER SQ. YD. PER FOOT OF DEPTH.
5. T= MATTRESS THICKNESS, D= DEPTH TO PROTECT. SEE PLAN NOTES FOR THESE VALUES.

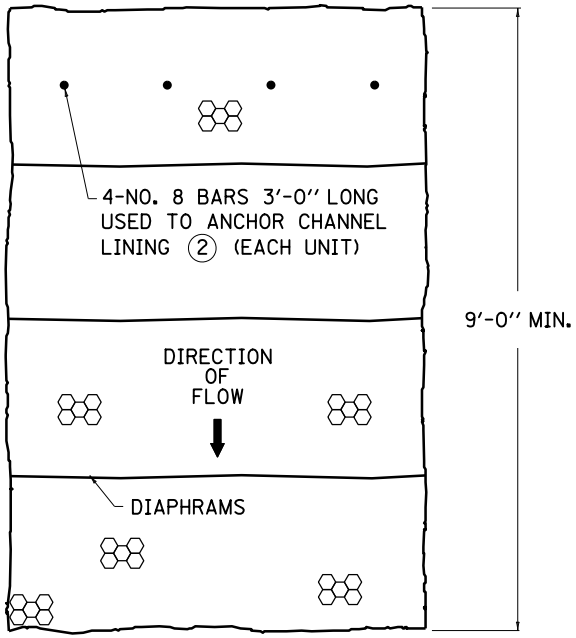

PLAN VIEW

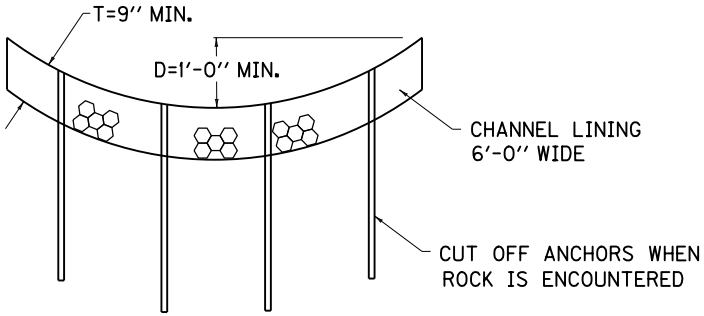

ELEVATION VIEW 5

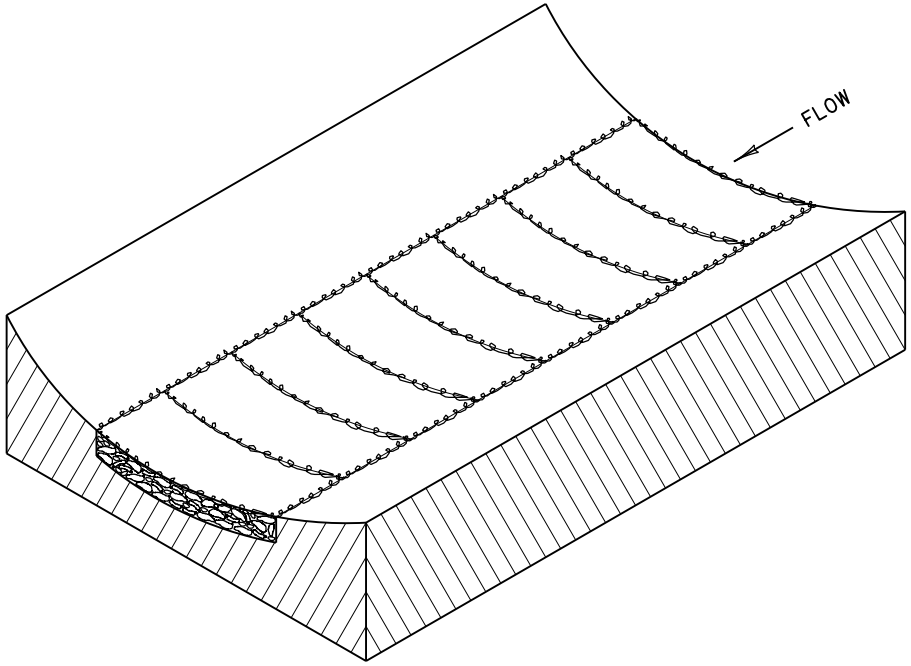

CHANNEL LINING
ISOMETRIC VIEW

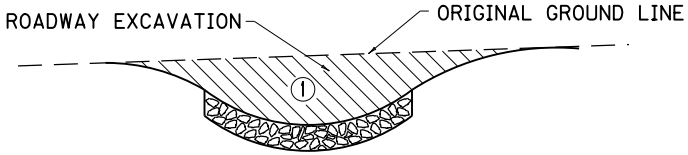

ROADWAY EXCAVATION 1

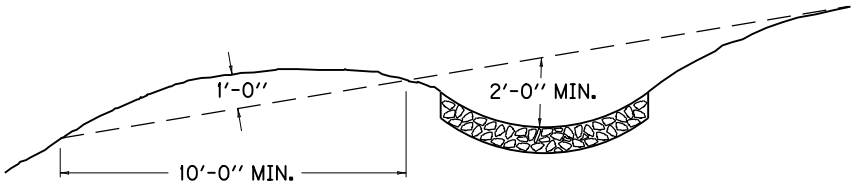

TYPICAL INTERCEPTOR DITCH

KENTUCKY
DEPARTMENT OF HIGHWAYS

CHANNEL LINING
CLASS I A
(MATTRESS UNITS)

STANDARD DRAWING NO. RDD-030-07

SUBMITTED David Kratt — DIRECTOR DIVISION OF DESIGN — 11-21-07 DATE

APPROVED Marcelyn Mathews — STATE HIGHWAY ENGINEER — 11-21-07 DATE

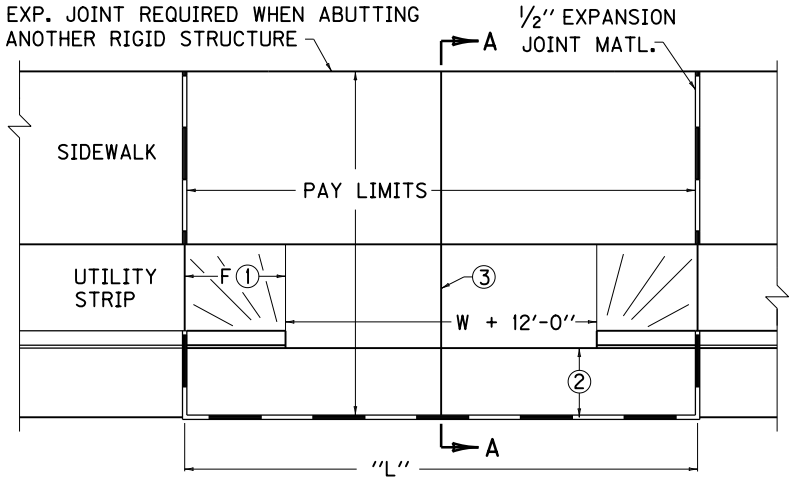

PLAN VIEW

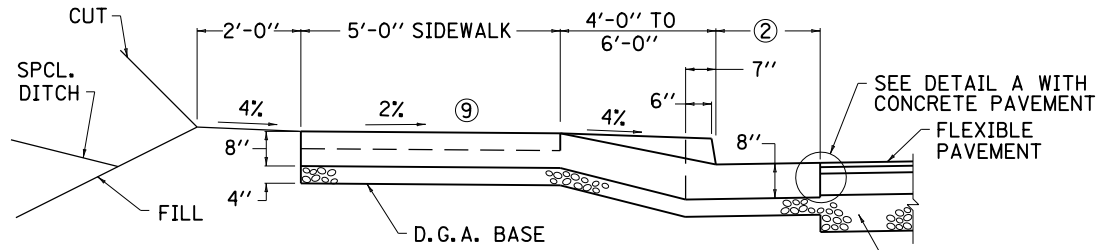

SECTION A-A CONDITION NO. 1

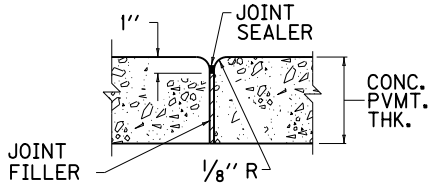

DETAIL A

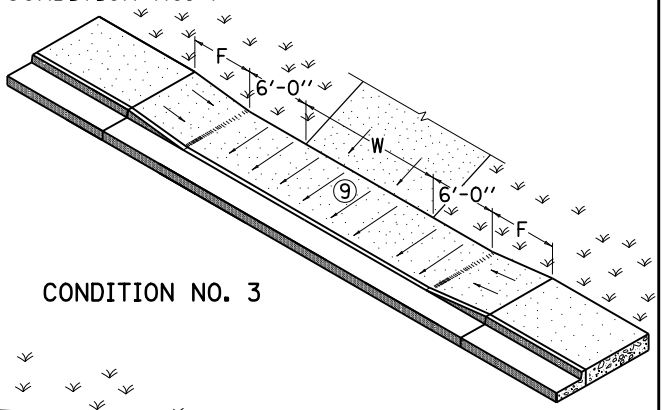

CONDITION NO. 3

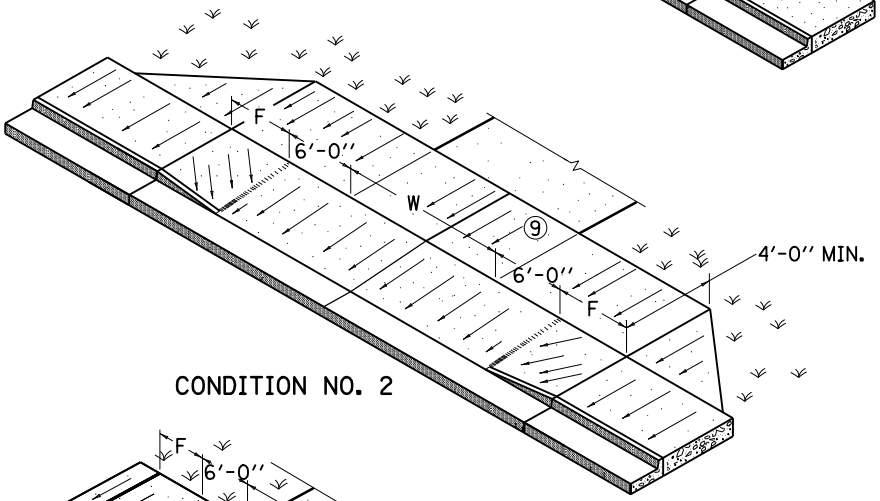

CONDITION NO. 2

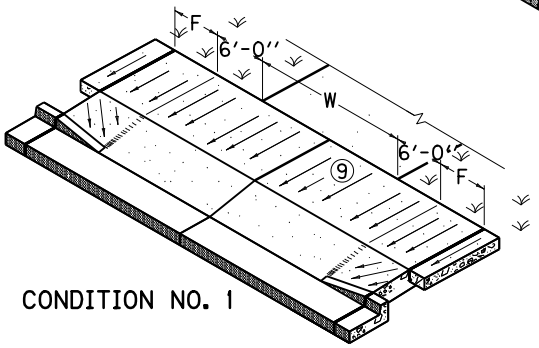

CONDITION NO. 1

~ NOTES ~

① FOR WIDTH W AND F:
RESIDENTIAL - MINIMUM W = 12'-0", MAXIMUM W = 24'-0"; MINIMUM F = 2'-6", MAXIMUM F = 10'-0"
COMMERCIAL - MINIMUM W = 24'-0", MAXIMUM W = 36'-0"; F = 10'-0"
WHEN MORE THAN 2 LANES ARE REQUIRED, 36'-0" WIDTH MAY BE INCREASED TO RELIEVE INTERFERENCE BETWEEN ENTERING AND EXITING TRAFFIC. AT THE ENGINEER'S DISCRETION RADIAL RETURNS MAY BE USED ON ENTRANCES. SOME APPLICABLE CASES ARE THE FOLLOWING:

a. ON ENTRANCES EXPECTED TO CARRY HIGH VOLUMES OF TRAFFIC.
b. WHEN ENTRANCE WIDTH IS GREATER THAN 36'.
c. WHEN THE HIGHWAY HAS A POSTED OR OPERATING SPEED OVER 40 MPH.
d. ON A RURAL SECTION WHERE A FLUSH SHOULDER EXISTS.
e. WHERE AN EXCLUSIVE RIGHT TURN LANE IS USED.

② 1'-0" OR 2'-0" WITH CONCRETE PAVEMENT, 2'-0" WITH FLEXIBLE PAVEMENT

③ WHEN "L" DIMENSION IS GREATER THAN 15'-0" A SAWED AND SEALED JOINT, 1 1/2" DEEP AND 1/4" WIDE SHALL BE PLACED AT THE CENTER OF THE "L" DIMENSION. WIDE ENTRANCES REQUIRE ADDITIONAL JOINTS, SPACING SHALL NOT EXCEED 15'-0" O.C.

4. CLASS "A" CONCRETE OR JOINTED PLAIN CONCRETE PAVEMENT SHALL BE USED IN THE ENTRANCE PAVEMENT.
5. THE ENTRANCE PAVEMENT SHALL RECEIVE A BROOM FINISH AND SHALL BE CURED THE SAME AS THE MAINLINE PAVEMENT AND/OR SIDEWALK.
6. THE CONTRACT UNIT PRICE BID PER SQUARE YARD FOR "CONC. ENT. PAVEMENT-8 INCH (CODE NO. 2101)" SHALL INCLUDE CLASS "A" CONCRETE AND ALL INCIDENTALS NECESSARY TO COMPLETE THE WORK. D.G.A. AND DETECTABLE WARNINGS SHALL BE SEPARATE BID ITEMS.
7. USE CONDITION NO. 2 OR NO. 3 WHEN LITTLE OR NO UTILITY STRIP IS PROVIDED, AND INCORPORATE FEATURES OF OTHER DESIGNS SHOWN WHERE NOT IN CONFLICT.
8. PROVIDED THAT ADA GUIDELINES SHOWN IN NOTES ⑨ AND 10 ARE FOLLOWED, THE ENGINEER MAY MODIFY THE DESIGN TO BETTER FIT EXISTING CONDITIONS.

⑨ 2% CROSS SLOPE MAXIMUM ON SIDEWALK. IF CONDITIONS WARRANT, SIDEWALK MAY BE SLOPED 2% AWAY FROM ROADWAY.

10. SIDEWALKS SHOULD BE DESIGNED WITH A MAX. GRADE OF 5% . WHERE A SIDEWALK RUNS ALONG A STEEP ROADWAY, THE SIDEWALK GRADE MAY EXCEED 5% IF IT FOLLOWS THE GRADE OF THE ROADWAY.
11. COMMERCIAL DRIVEWAYS WITH TRAFFIC CONTROL DEVICES REQUIRE ADA SIDEWALK TREATMENTS WITH DETECTABLE WARNINGS.

USE WITH CUR. STD. DWG.
RGX-040

KENTUCKY
DEPARTMENT OF HIGHWAYS

CONCRETE ENTRANCE PAVEMENT AND SIDEWALK

STANDARD DRAWING NO. RPM-150-07

SUBMITTED _____ DIRECTOR DIVISION OF DESIGN — DATE 12-2-11

APPROVED _____ STATE HIGHWAY ENGINEER — DATE 12-2-11

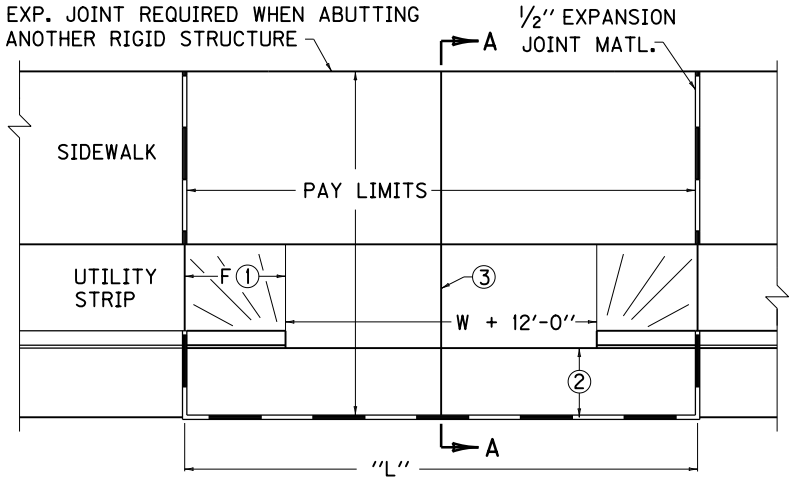

PLAN VIEW

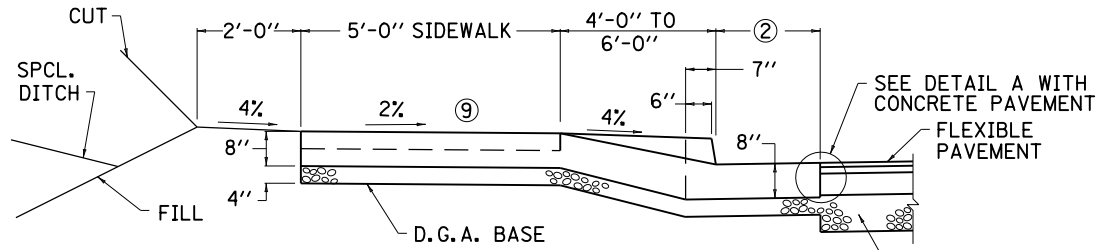

SECTION A-A CONDITION NO. 1

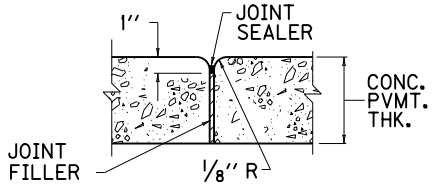

DETAIL A

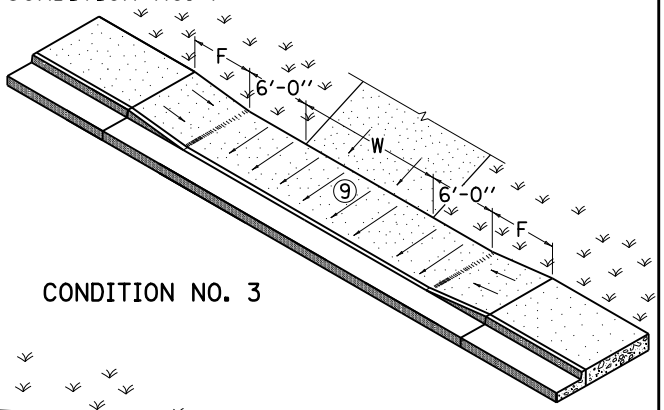

CONDITION NO. 3

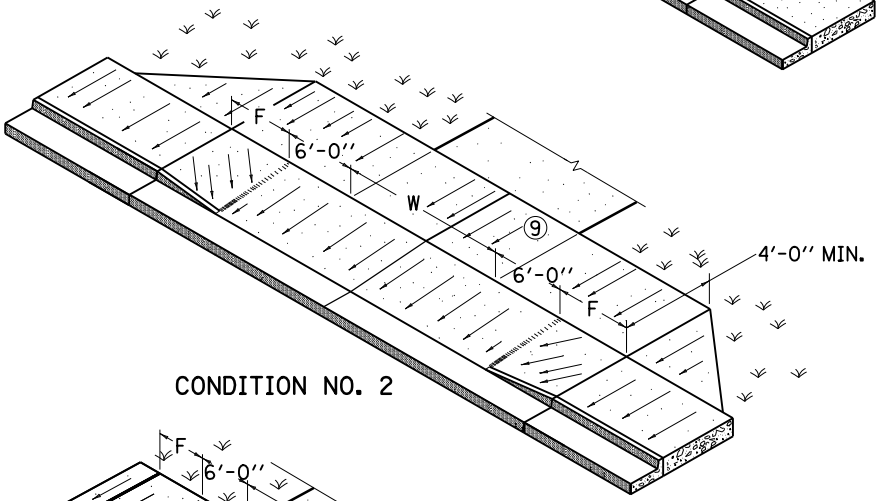

CONDITION NO. 2

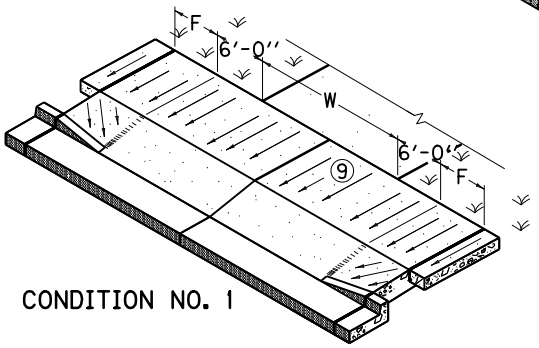

CONDITION NO. 1

~ NOTES ~

① FOR WIDTH W AND F:
RESIDENTIAL - MINIMUM W = 12'-0", MAXIMUM W = 24'-0"; MINIMUM F = 2'-6", MAXIMUM F = 10'-0"
COMMERCIAL - MINIMUM W = 24'-0", MAXIMUM W = 36'-0"; F = 10'-0"
WHEN MORE THAN 2 LANES ARE REQUIRED, 36'-0" WIDTH MAY BE INCREASED TO RELIEVE INTERFERENCE BETWEEN ENTERING AND EXITING TRAFFIC. AT THE ENGINEER'S DISCRETION RADIAL RETURNS MAY BE USED ON ENTRANCES. SOME APPLICABLE CASES ARE THE FOLLOWING:

a. ON ENTRANCES EXPECTED TO CARRY HIGH VOLUMES OF TRAFFIC.
b. WHEN ENTRANCE WIDTH IS GREATER THAN 36'.
c. WHEN THE HIGHWAY HAS A POSTED OR OPERATING SPEED OVER 40 MPH.
d. ON A RURAL SECTION WHERE A FLUSH SHOULDER EXISTS.
e. WHERE AN EXCLUSIVE RIGHT TURN LANE IS USED.

② 1'-0" OR 2'-0" WITH CONCRETE PAVEMENT, 2'-0" WITH FLEXIBLE PAVEMENT

③ WHEN "L" DIMENSION IS GREATER THAN 15'-0" A SAWED AND SEALED JOINT, 1 1/2" DEEP AND 1/4" WIDE SHALL BE PLACED AT THE CENTER OF THE "L" DIMENSION. WIDE ENTRANCES REQUIRE ADDITIONAL JOINTS, SPACING SHALL NOT EXCEED 15'-0" O.C.

4. CLASS "A" CONCRETE OR JOINTED PLAIN CONCRETE PAVEMENT SHALL BE USED IN THE ENTRANCE PAVEMENT.
5. THE ENTRANCE PAVEMENT SHALL RECEIVE A BROOM FINISH AND SHALL BE CURED THE SAME AS THE MAINLINE PAVEMENT AND/OR SIDEWALK.
6. THE CONTRACT UNIT PRICE BID PER SQUARE YARD FOR "CONC. ENT. PAVEMENT-8 INCH (CODE NO. 2101)" SHALL INCLUDE CLASS "A" CONCRETE AND ALL INCIDENTALS NECESSARY TO COMPLETE THE WORK. D.G.A. AND DETECTABLE WARNINGS SHALL BE SEPARATE BID ITEMS.
7. USE CONDITION NO. 2 OR NO. 3 WHEN LITTLE OR NO UTILITY STRIP IS PROVIDED, AND INCORPORATE FEATURES OF OTHER DESIGNS SHOWN WHERE NOT IN CONFLICT.
8. PROVIDED THAT ADA GUIDELINES SHOWN IN NOTES ⑨ AND 10 ARE FOLLOWED, THE ENGINEER MAY MODIFY THE DESIGN TO BETTER FIT EXISTING CONDITIONS.

⑨ 2% CROSS SLOPE MAXIMUM ON SIDEWALK. IF CONDITIONS WARRANT, SIDEWALK MAY BE SLOPED 2% AWAY FROM ROADWAY.

10. SIDEWALKS SHOULD BE DESIGNED WITH A MAX. GRADE OF 5% . WHERE A SIDEWALK RUNS ALONG A STEEP ROADWAY, THE SIDEWALK GRADE MAY EXCEED 5% IF IT FOLLOWS THE GRADE OF THE ROADWAY.
11. COMMERCIAL DRIVEWAYS WITH TRAFFIC CONTROL DEVICES REQUIRE ADA SIDEWALK TREATMENTS WITH DETECTABLE WARNINGS.

USE WITH CUR. STD. DWG.
RGX-040

KENTUCKY
DEPARTMENT OF HIGHWAYS

CONCRETE ENTRANCE PAVEMENT AND SIDEWALK

STANDARD DRAWING NO. RPM-150-07

SUBMITTED _____ DIRECTOR DIVISION OF DESIGN — DATE 12-2-11

APPROVED _____ STATE HIGHWAY ENGINEER — DATE 12-2-11

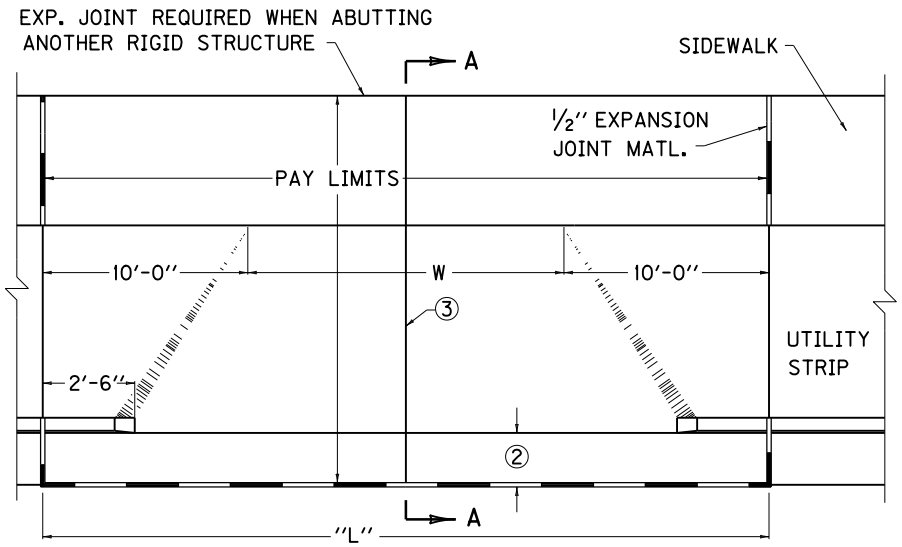

PLAN VIEW

~ NOTES ~

① FOR WIDTH W:
COMMERCIAL - MINIMUM W = 24'-0'', MAXIMUM W = 36'-0''
WHEN MORE THAN 2 LANES ARE REQUIRED, 36'-0'' WIDTH MAY BE INCREASED TO RELIEVE INTERFERENCE BETWEEN ENTERING AND EXITING TRAFFIC. AT THE ENGINEER'S DISCRETION RADIAL RETURNS MAY BE USED ON ENTRANCES. SOME APPLICABLE CASES ARE THE FOLLOWING:

a. ON ENTRANCES EXPECTED TO CARRY HIGH VOLUMES OF TRAFFIC.
b. WHEN ENTRANCE WIDTH IS GREATER THAN 36'.
c. WHEN THE HIGHWAY HAS A POSTED OR OPERATING SPEED OVER 40 MPH.
d. ON A RURAL SECTION WHERE A FLUSH SHOULDER EXISTS.
e. WHERE AN EXCLUSIVE RIGHT TURN LANE IS USED.

② 1'-0'' OR 2'-0'' WITH CONCRETE PAVEMENT, 2'-0'' WITH FLEXIBLE PAVEMENT.

③ WHEN ''L'' DIMENSION IS GREATER THAN 15'-0'' A SAWED AND SEALED JOINT, 1 1/2'' DEEP AND 1/4'' WIDE SHALL BE PLACED AT THE CENTER OF THE ''L'' DIMENSION. WIDE ENTRANCES REQUIRE ADDITIONAL JOINTS, SPACING SHALL NOT EXCEED 15'-0'' O.C.

4. CLASS ''A'' CONCRETE OR JOINTED PLAIN CONCRETE PAVEMENT SHALL BE USED IN THE ENTRANCE PAVEMENT.

5. THE ENTRANCE PAVEMENT SHALL RECEIVE A BROOM FINISH AND SHALL BE CURED THE SAME AS THE MAINLINE PAVEMENT AND/OR SIDEWALK.

6. THE CONTRACT UNIT PRICE BID PER SQUARE YARD FOR ''CONC. ENT. PAVEMENT-8 INCH (CODE NO. 2101)'' SHALL INCLUDE CLASS ''A'' CONCRETE AND ALL INCIDENTALS NECESSARY TO COMPLETE THE WORK. D.G.A. AND DETECTABLE WARNINGS SHALL BE SEPARATE BID ITEMS.

7. PROVIDING THAT ADA GUIDELINES SHOWN IN NOTE ⑧ AND 9 ARE FOLLOWED, THE ENGINEER MAY MODIFY THE DESIGN TO BETTER FIT EXISTING CONDITIONS.

⑧ 2% CROSS SLOPE MAXIMUM ON SIDEWALK.

9. SIDEWALKS SHOULD BE DESIGNED WITH A MAX. GRADE OF FIVE PERCENT. WHERE A SIDEWALK RUNS ALONG A STEEP ROADWAY, THE SIDEWALK GRADE MAY EXCEED FIVE PERCENT IF IT FOLLOWS THE GRADE OF THE ROADWAY.

⑩ COMMERCIAL DRIVEWAYS WITH TRAFFIC CONTROL DEVICES REQUIRE ADA SIDEWALK TREATMENTS WITH DETECTABLE WARNINGS.

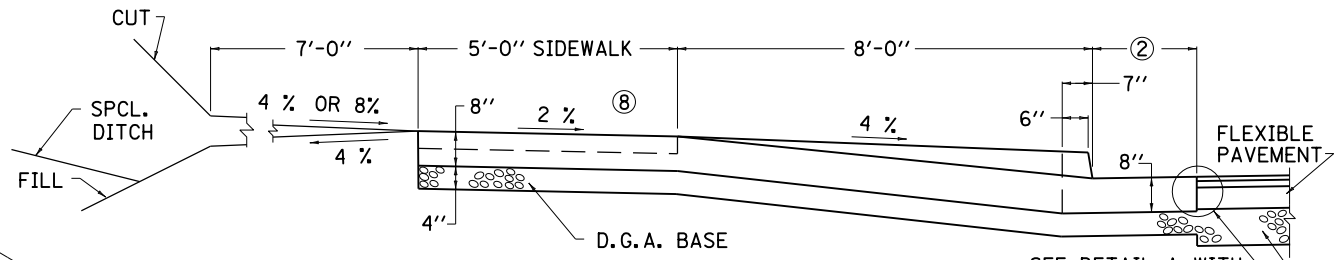

SECTION A-A

USE WITH CUR. STD. DWG. RGX-040

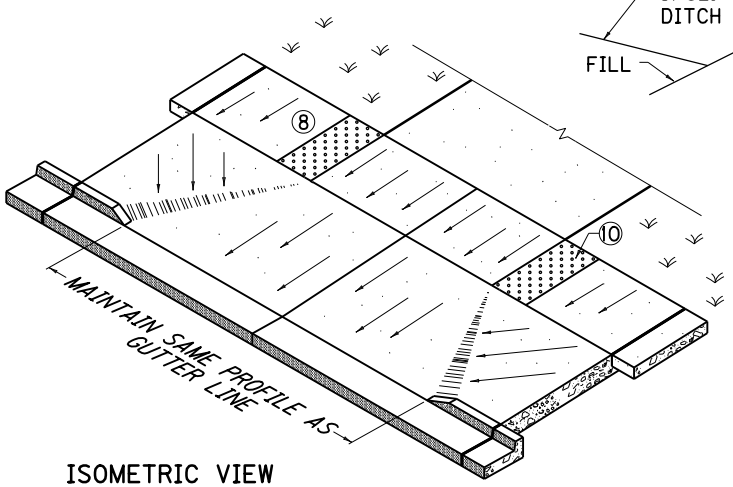

ISOMETRIC VIEW

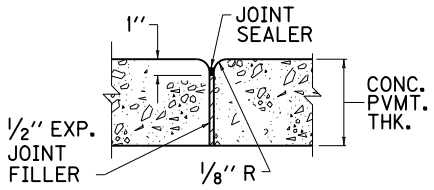

DETAIL A

KENTUCKY
DEPARTMENT OF HIGHWAYS

CONCRETE
ENTRANCE PAVEMENT
AND SIDEWALK

STANDARD DRAWING NO. RPM-152-07

SUBMITTED _____ DIRECTOR DIVISION OF DESIGN — DATE 12-2-11

APPROVED _____ STATE HIGHWAY ENGINEER — DATE 12-2-11

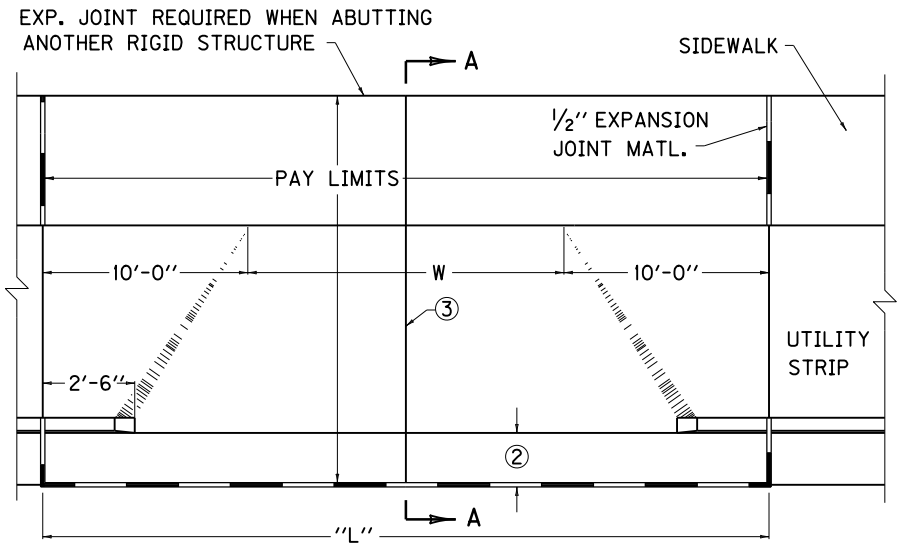

PLAN VIEW

~ NOTES ~

① FOR WIDTH W:
COMMERCIAL - MINIMUM W = 24'-0'', MAXIMUM W = 36'-0''
WHEN MORE THAN 2 LANES ARE REQUIRED, 36'-0'' WIDTH MAY BE INCREASED TO RELIEVE INTERFERENCE BETWEEN ENTERING AND EXITING TRAFFIC. AT THE ENGINEER'S DISCRETION RADIAL RETURNS MAY BE USED ON ENTRANCES. SOME APPLICABLE CASES ARE THE FOLLOWING:

a. ON ENTRANCES EXPECTED TO CARRY HIGH VOLUMES OF TRAFFIC.
b. WHEN ENTRANCE WIDTH IS GREATER THAN 36'.
c. WHEN THE HIGHWAY HAS A POSTED OR OPERATING SPEED OVER 40 MPH.
d. ON A RURAL SECTION WHERE A FLUSH SHOULDER EXISTS.
e. WHERE AN EXCLUSIVE RIGHT TURN LANE IS USED.

② 1'-0'' OR 2'-0'' WITH CONCRETE PAVEMENT, 2'-0'' WITH FLEXIBLE PAVEMENT.

③ WHEN ''L'' DIMENSION IS GREATER THAN 15'-0'' A SAWED AND SEALED JOINT, 1 1/2'' DEEP AND 1/4'' WIDE SHALL BE PLACED AT THE CENTER OF THE ''L'' DIMENSION. WIDE ENTRANCES REQUIRE ADDITIONAL JOINTS, SPACING SHALL NOT EXCEED 15'-0'' O.C.

4. CLASS ''A'' CONCRETE OR JOINTED PLAIN CONCRETE PAVEMENT SHALL BE USED IN THE ENTRANCE PAVEMENT.

5. THE ENTRANCE PAVEMENT SHALL RECEIVE A BROOM FINISH AND SHALL BE CURED THE SAME AS THE MAINLINE PAVEMENT AND/OR SIDEWALK.

6. THE CONTRACT UNIT PRICE BID PER SQUARE YARD FOR ''CONC. ENT. PAVEMENT-8 INCH (CODE NO. 2101)'' SHALL INCLUDE CLASS ''A'' CONCRETE AND ALL INCIDENTALS NECESSARY TO COMPLETE THE WORK. D.G.A. AND DETECTABLE WARNINGS SHALL BE SEPARATE BID ITEMS.

7. PROVIDING THAT ADA GUIDELINES SHOWN IN NOTE ⑧ AND 9 ARE FOLLOWED, THE ENGINEER MAY MODIFY THE DESIGN TO BETTER FIT EXISTING CONDITIONS.

⑧ 2% CROSS SLOPE MAXIMUM ON SIDEWALK.

9. SIDEWALKS SHOULD BE DESIGNED WITH A MAX. GRADE OF FIVE PERCENT. WHERE A SIDEWALK RUNS ALONG A STEEP ROADWAY, THE SIDEWALK GRADE MAY EXCEED FIVE PERCENT IF IT FOLLOWS THE GRADE OF THE ROADWAY.

⑩ COMMERCIAL DRIVEWAYS WITH TRAFFIC CONTROL DEVICES REQUIRE ADA SIDEWALK TREATMENTS WITH DETECTABLE WARNINGS.

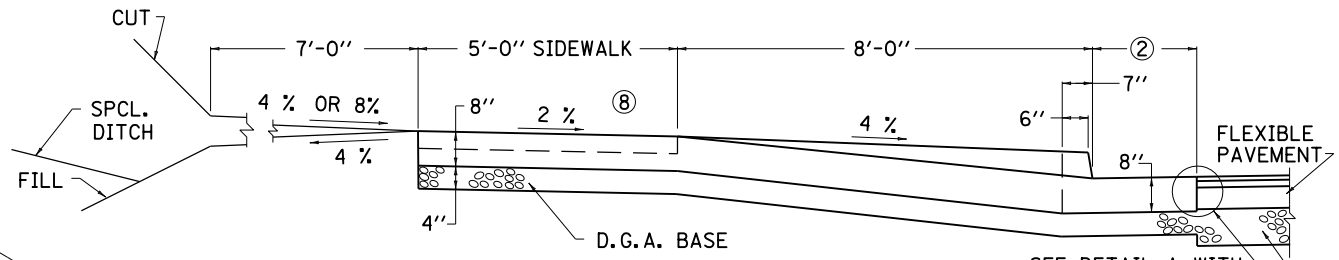

SECTION A-A

USE WITH CUR. STD. DWG. RGX-040

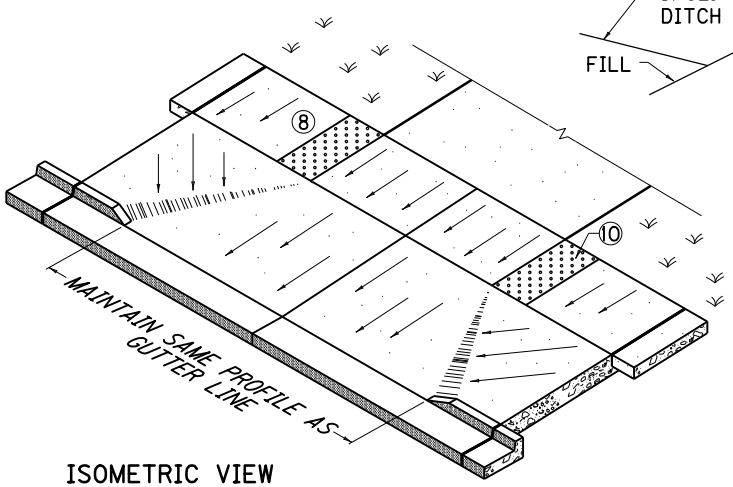

ISOMETRIC VIEW

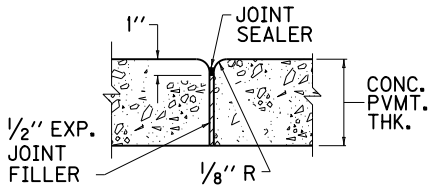

DETAIL A

KENTUCKY
DEPARTMENT OF HIGHWAYS

CONCRETE
ENTRANCE PAVEMENT
AND SIDEWALK

STANDARD DRAWING NO. RPM-152-07

SUBMITTED _____ DIRECTOR DIVISION OF DESIGN — DATE 12-2-11

APPROVED _____ STATE HIGHWAY ENGINEER — DATE 12-2-11

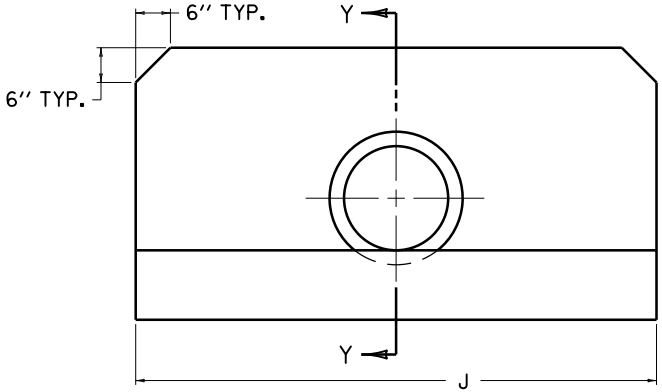

ELEVATION VIEW

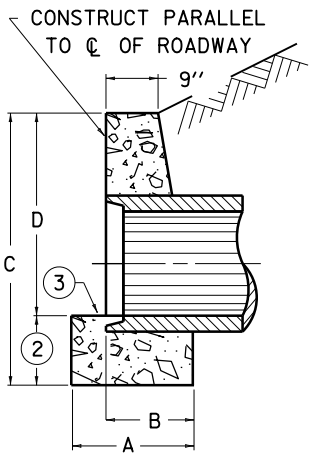

SECTION Y-Y

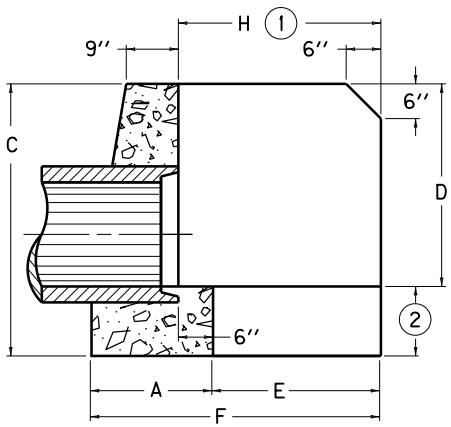

SECTION X-X

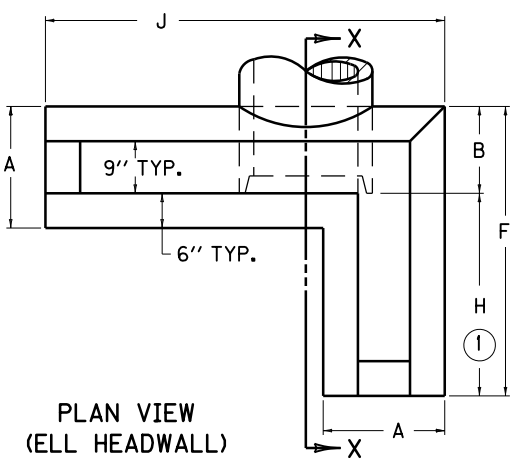

PLAN VIEW
(ELL HEADWALL)

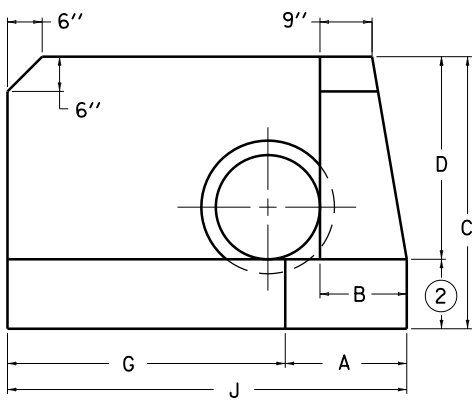

ELEVATION VIEW (ELL HEADWALL)

DIMENSIONS AND QUANTITIES

HEADWALL TYPE	PIPE DIAMETER	HEADWALL DIMENSIONS									CUBIC YARDS CONCRETE FOR ONE HEADWALL	
		A	B	C	D	E	F	G	H (1)	J	(EARTH)	(ROCK)
STANDARD	12"	1'-8"	1'-2"	4'-0"	2'-6"	—	—	—	—	6'-0"	1.05	0.87
	15"	1'-8½"	1'-2½"	4'-3"	2'-9"	—	—	—	—	6'-9"	1.25	1.03
	18"	1'-9"	1'-3"	4'-6"	3'-0"	—	—	—	—	7'-6"	1.48	1.23
	21"	1'-9½"	1'-3½"	4'-9"	3'-3"	—	—	—	—	8'-3"	1.73	1.46
	24"	1'-10"	1'-4"	5'-0"	3'-6"	—	—	—	—	9'-0"	1.99	1.69
	27"	1'-10½"	1'-4½"	5'-3"	3'-9"	—	—	—	—	9'-9"	2.27	1.93
RAISED	12"	1'-8"	1'-2"	4'-6"	3'-0"	—	—	—	—	7'-6"	1.45	1.23
	15"	1'-8½"	1'-2½"	4'-9"	3'-3"	—	—	—	—	8'-3"	1.69	1.43
	18"	1'-9"	1'-3"	5'-0"	3'-6"	—	—	—	—	9'-0"	1.96	1.67
	21"	1'-9½"	1'-3½"	5'-3"	3'-9"	—	—	—	—	9'-9"	2.25	1.93
	24"	1'-10"	1'-4"	5'-6"	4'-0"	—	—	—	—	10'-6"	2.54	2.19
	27"	1'-10½"	1'-4½"	5'-9"	4'-3"	—	—	—	—	11'-3"	2.88	2.49
STANDARD ELL	12"	1'-8"	1'-2"	4'-0"	2'-6"	2'-0"	3'-8"	3'-0"	2'-6"	4'-8"	1.19	0.99
	15"	1'-8½"	1'-2½"	4'-3"	2'-9"	2'-3"	3'-11½"	3'-6"	2'-9"	5'-2½"	1.42	1.19
	18"	1'-9"	1'-3"	4'-6"	3'-0"	2'-6"	4'-3"	4'-0"	3'-0"	5'-9"	1.67	1.41
	21"	1'-9½"	1'-3½"	4'-9"	3'-3"	2'-9"	4'-6½"	4'-6"	3'-3"	6'-3½"	1.93	1.63
	24"	1'-10"	1'-4"	5'-0"	3'-6"	3'-0"	4'-10"	5'-0"	3'-6"	6'-10"	2.22	1.89
	27"	1'-10½"	1'-4½"	5'-3"	3'-9"	3'-3"	5'-1½"	5'-6"	3'-9"	7'-4½"	2.52	2.15
RAISED ELL	12"	1'-8"	1'-2"	4'-6"	3'-0"	2'-9"	4'-5"	3'-9"	3'-3"	5'-5"	1.62	1.37
	15"	1'-8½"	1'-2½"	4'-9"	3'-3"	3'-0"	4'-8½"	4'-3"	3'-6"	5'-11½"	1.88	1.59
	18"	1'-9"	1'-3"	5'-0"	3'-6"	3'-3"	5'-0"	4'-9"	3'-9"	6'-6"	2.16	1.85
	21"	1'-9½"	1'-3½"	5'-3"	3'-9"	3'-6"	5'-3½"	5'-3"	4'-0"	7'-0½"	2.47	2.12
	24"	1'-10"	1'-4"	5'-6"	4'-0"	3'-9"	5'-7"	5'-9"	4'-3"	7'-7"	2.79	2.41
	27"	1'-10½"	1'-4½"	5'-9"	4'-3"	4'-0"	5'-10½"	6'-3"	4'-6"	8'-1½"	3.14	2.72

NOTES

1. THE DIMENSION AND/OR ANGLE OF INTERSECTION BETWEEN THE WALLS MAY BE VARIED ON CONSTRUCTION.
2. VOLUME BASED ON VALUES OF 18" ON EARTH, 12" ON ROCK.
3. FINISH BY FLOATING
4. CIRCULAR PIPE INCLUDES SLIGHTLY ELLIPTICAL CONCRETE PIPE WITH CIRCULAR REINFORCEMENT.

KENTUCKY
DEPARTMENT OF HIGHWAYS

CONCRETE HEADWALLS
FOR
12"-27"
CIRCULAR PIPE CULVERTS

STANDARD DRAWING NO. RDH-005-02

SUBMITTED John B. Lochstede — DIRECTOR DIVISION OF DESIGN — 12-1-99 DATE

APPROVED — STATE HIGHWAY ENGINEER — 12-1-99 DATE

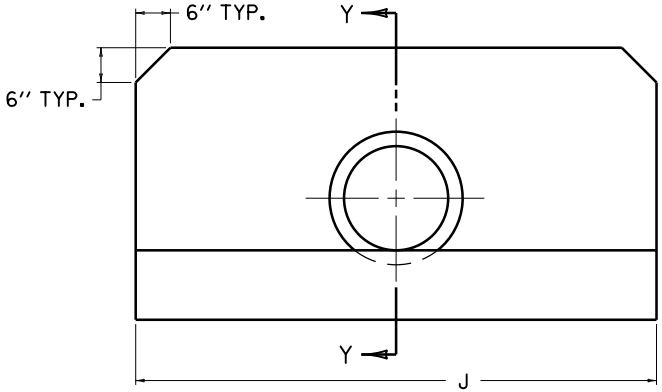

ELEVATION VIEW

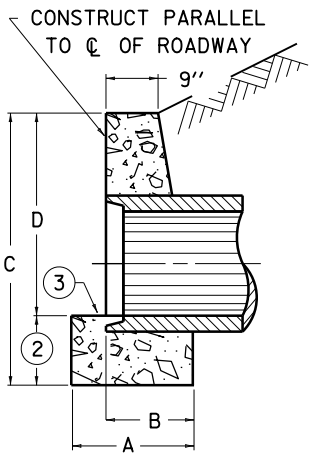

SECTION Y-Y

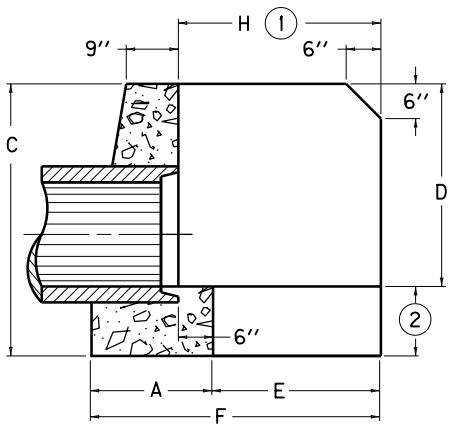

SECTION X-X

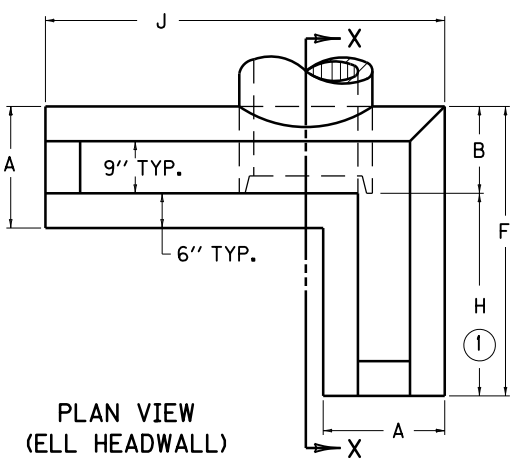

PLAN VIEW
(ELL HEADWALL)

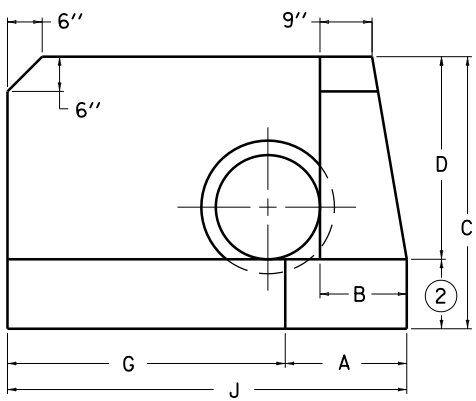

ELEVATION VIEW (ELL HEADWALL)

DIMENSIONS AND QUANTITIES

HEADWALL TYPE	PIPE DIAMETER	HEADWALL DIMENSIONS									CUBIC YARDS CONCRETE FOR ONE HEADWALL	
		A	B	C	D	E	F	G	H (1)	J	(EARTH)	(ROCK)
STANDARD	12"	1'-8"	1'-2"	4'-0"	2'-6"	—	—	—	—	6'-0"	1.05	0.87
	15"	1'-8½"	1'-2½"	4'-3"	2'-9"	—	—	—	—	6'-9"	1.25	1.03
	18"	1'-9"	1'-3"	4'-6"	3'-0"	—	—	—	—	7'-6"	1.48	1.23
	21"	1'-9½"	1'-3½"	4'-9"	3'-3"	—	—	—	—	8'-3"	1.73	1.46
	24"	1'-10"	1'-4"	5'-0"	3'-6"	—	—	—	—	9'-0"	1.99	1.69
	27"	1'-10½"	1'-4½"	5'-3"	3'-9"	—	—	—	—	9'-9"	2.27	1.93
RAISED	12"	1'-8"	1'-2"	4'-6"	3'-0"	—	—	—	—	7'-6"	1.45	1.23
	15"	1'-8½"	1'-2½"	4'-9"	3'-3"	—	—	—	—	8'-3"	1.69	1.43
	18"	1'-9"	1'-3"	5'-0"	3'-6"	—	—	—	—	9'-0"	1.96	1.67
	21"	1'-9½"	1'-3½"	5'-3"	3'-9"	—	—	—	—	9'-9"	2.25	1.93
	24"	1'-10"	1'-4"	5'-6"	4'-0"	—	—	—	—	10'-6"	2.54	2.19
	27"	1'-10½"	1'-4½"	5'-9"	4'-3"	—	—	—	—	11'-3"	2.88	2.49
STANDARD ELL	12"	1'-8"	1'-2"	4'-0"	2'-6"	2'-0"	3'-8"	3'-0"	2'-6"	4'-8"	1.19	0.99
	15"	1'-8½"	1'-2½"	4'-3"	2'-9"	2'-3"	3'-11½"	3'-6"	2'-9"	5'-2½"	1.42	1.19
	18"	1'-9"	1'-3"	4'-6"	3'-0"	2'-6"	4'-3"	4'-0"	3'-0"	5'-9"	1.67	1.41
	21"	1'-9½"	1'-3½"	4'-9"	3'-3"	2'-9"	4'-6½"	4'-6"	3'-3"	6'-3½"	1.93	1.63
	24"	1'-10"	1'-4"	5'-0"	3'-6"	3'-0"	4'-10"	5'-0"	3'-6"	6'-10"	2.22	1.89
	27"	1'-10½"	1'-4½"	5'-3"	3'-9"	3'-3"	5'-1½"	5'-6"	3'-9"	7'-4½"	2.52	2.15
RAISED ELL	12"	1'-8"	1'-2"	4'-6"	3'-0"	2'-9"	4'-5"	3'-9"	3'-3"	5'-5"	1.62	1.37
	15"	1'-8½"	1'-2½"	4'-9"	3'-3"	3'-0"	4'-8½"	4'-3"	3'-6"	5'-11½"	1.88	1.59
	18"	1'-9"	1'-3"	5'-0"	3'-6"	3'-3"	5'-0"	4'-9"	3'-9"	6'-6"	2.16	1.85
	21"	1'-9½"	1'-3½"	5'-3"	3'-9"	3'-6"	5'-3½"	5'-3"	4'-0"	7'-0½"	2.47	2.12
	24"	1'-10"	1'-4"	5'-6"	4'-0"	3'-9"	5'-7"	5'-9"	4'-3"	7'-7"	2.79	2.41
	27"	1'-10½"	1'-4½"	5'-9"	4'-3"	4'-0"	5'-10½"	6'-3"	4'-6"	8'-1½"	3.14	2.72

NOTES

1. THE DIMENSION AND/OR ANGLE OF INTERSECTION BETWEEN THE WALLS MAY BE VARIED ON CONSTRUCTION.
2. VOLUME BASED ON VALUES OF 18" ON EARTH, 12" ON ROCK.
3. FINISH BY FLOATING
4. CIRCULAR PIPE INCLUDES SLIGHTLY ELLIPTICAL CONCRETE PIPE WITH CIRCULAR REINFORCEMENT.

KENTUCKY
DEPARTMENT OF HIGHWAYS

CONCRETE HEADWALLS
FOR
12"-27"
CIRCULAR PIPE CULVERTS

STANDARD DRAWING NO. RDH-005-02

SUBMITTED John B. Lochstede — DIRECTOR DIVISION OF DESIGN — 12-1-99 DATE

APPROVED — STATE HIGHWAY ENGINEER — 12-1-99 DATE

STANDARD CURB & GUTTER

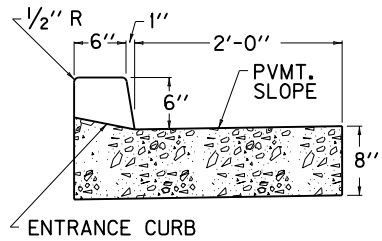

BARRIER CURB & GUTTER

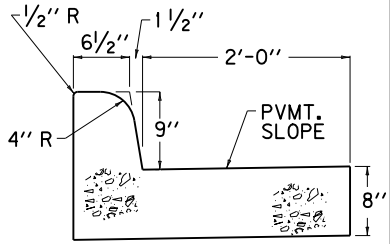

LIP CURB & GUTTER

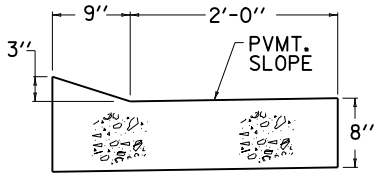

ISLAND CURB & GUTTER

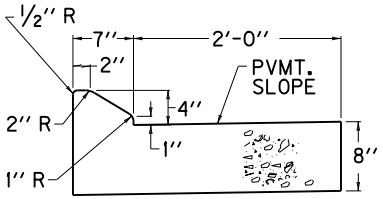

① STANDARD INTEGRAL CURB

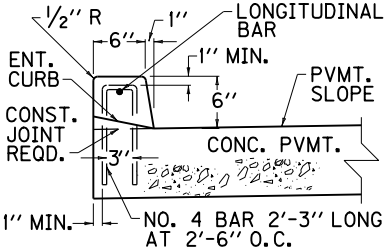

BARRIER INTEGRAL CURB

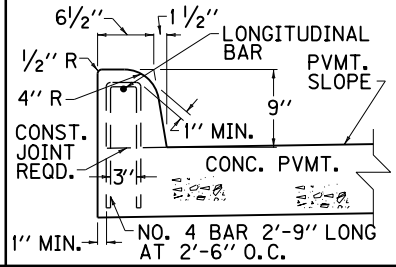

LIP INTEGRAL CURB

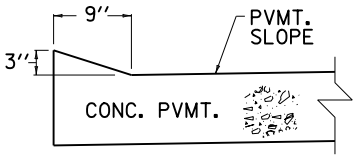

CONST. JOINT NOT PERMITTED

ISLAND INTEGRAL CURB

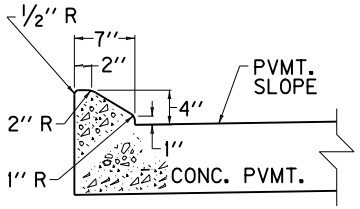

CONST. JOINT NOT PERMITTED

STANDARD HEADER CURB

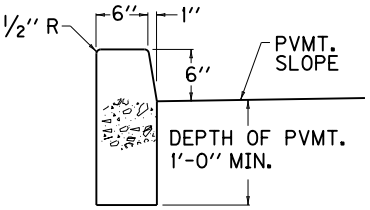

BARRIER HEADER CURB

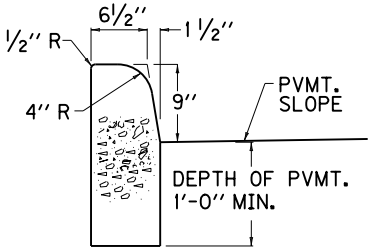

LIP HEADER CURB

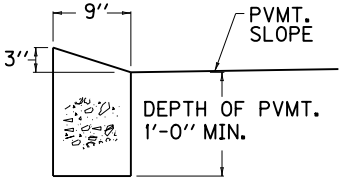

ISLAND HEADER CURB TYPE 1

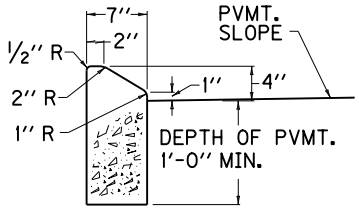

ISLAND HEADER CURB TYPE 2

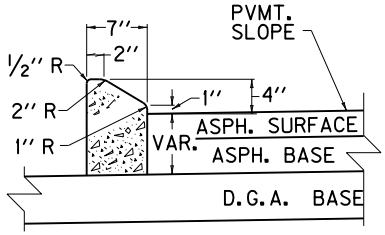

② STANDARD INTEGRAL CURB

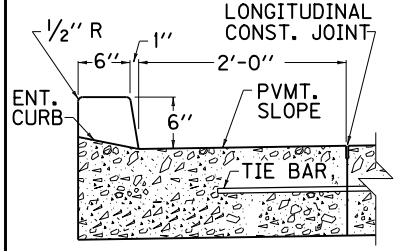

VALLEY GUTTER

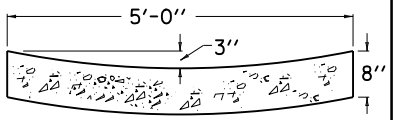

ASPHALT WEDGE CURB

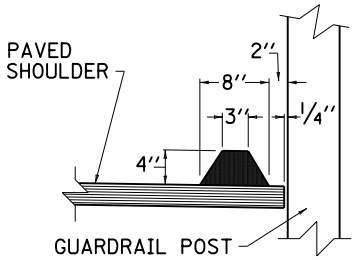

~ NOTES ~

ALL INTEGRAL CURBS SHOWING REINFORCING STEEL SHALL BE CAST SEPARATELY FROM THE PAVEMENT AND THE REINFORCEMENT SHALL CONSIST SOLELY OF NO. 4 BARS AS DETAILED ON THIS DRAWING. ON CONSTRUCTION CARE SHOULD BE TAKEN SO THAT NO REINFORCEMENT BARS ARE CLOSER THAN 3" TO THE CENTER OF THE SAWED TRANSVERSE JOINT.

①② THE CONTRACTOR HAS THE OPTION OF CONSTRUCTING THE STANDARD INTEGRAL CURB AS DETAILED IN EITHER ① OR ② . IF ② IS CHOSEN A LONGITUDINAL CONSTRUCTION JOINT SHALL BE REQUIRED AND THE REMAINING PAVEMENT AND CURB SHALL BE CONSTRUCTED MONOLITHIC WITHOUT A HORIZONTAL CONSTRUCTION JOINT AND ACCOMPANYING REINFORCING STEEL.

KENTUCKY
DEPARTMENT OF HIGHWAYS

CURB AND GUTTER, CURBS AND VALLEY GUTTER

STANDARD DRAWING NO. RPM-100-09

SUBMITTED [signature] DIRECTOR DIVISION OF DESIGN 12-2-02 DATE

APPROVED [signature] STATE HIGHWAY ENGINEER 12-2-02 DATE

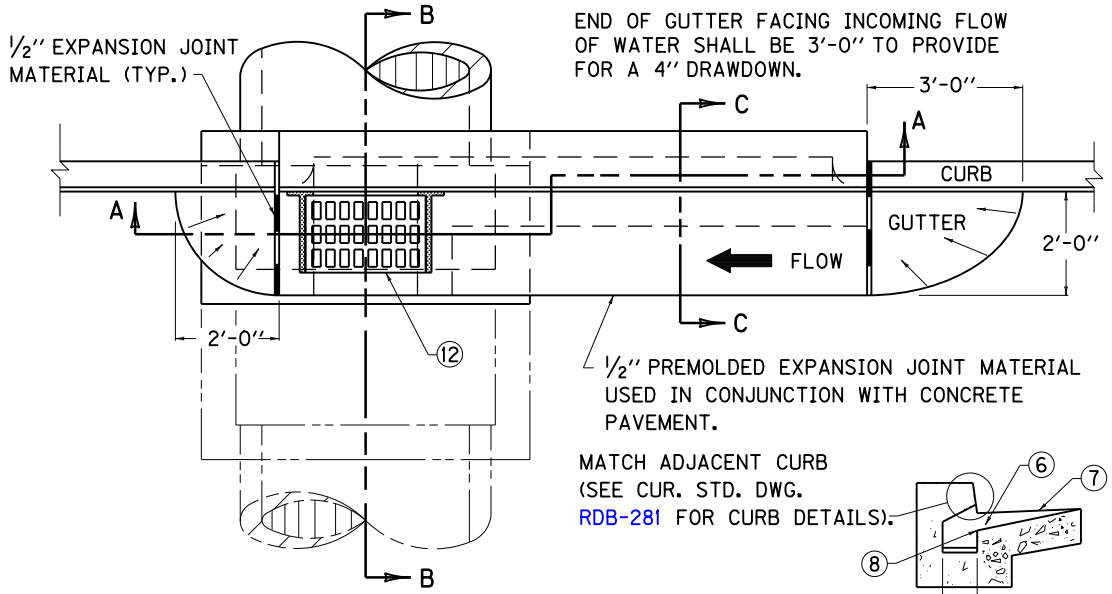

PLAN VIEW

SECTION C-C

NOTES

1. INLET SHALL BE CONSTRUCTED IN TWO PHASES (BOTTOM AND TOP)
   BID ITEM: CURB BOX INLET TYPE B (△)
   △ (B) = BOTTOM PHASE ONLY
   △ (T) = TOP PHASE ONLY
   NO SUFFIX INDICATES COMPLETE INLET.
2. SEE CUR. STD. DWGS. RDB-281, RDB-282, RDB-283, RDB-400, RDB-410, AND RDB-420 FOR STEEL PATTERN, DIMENSIONS AND QUANTITIES.
3. ALL WALLS , SLABS AND GUTTERS ARE 8" THICK UNLESS OTHERWISE INDICATED.

④ 24" DESIRED COVER, 12" MINIMUM COVER.

⑤ SPALLS OR CRUSHED STONE AROUND END OF A 4" OR 6" PIPE FOR SUBGRADE DRAINAGE.

⑥ 4" MINIMUM DRAWDOWN.

⑦ GUTTER CROSS SLOPE.

⑧ FLOW LINE (4" BELOW NORMAL GUTTERLINE ELEVATION).

⑨ LID MAY BE RAISED OR LOWERED IF APPROVED BY THE ENGINEER.

⑩ NOTE: "†" IS CONCRETE PIPE WALL THICKNESS OR METAL PIPE CORRUGATION DEPTH.

⑪ MINIMUM HEIGHT
H = Z + 1'-4" FOR ALL CURB TYPES

⑫ SEE CUR. STD. DWG. RDB-282 FOR FRAME AND GRATE DETAIL.

RISER
CU. YD. CONC. PER FT. HT.
0.3

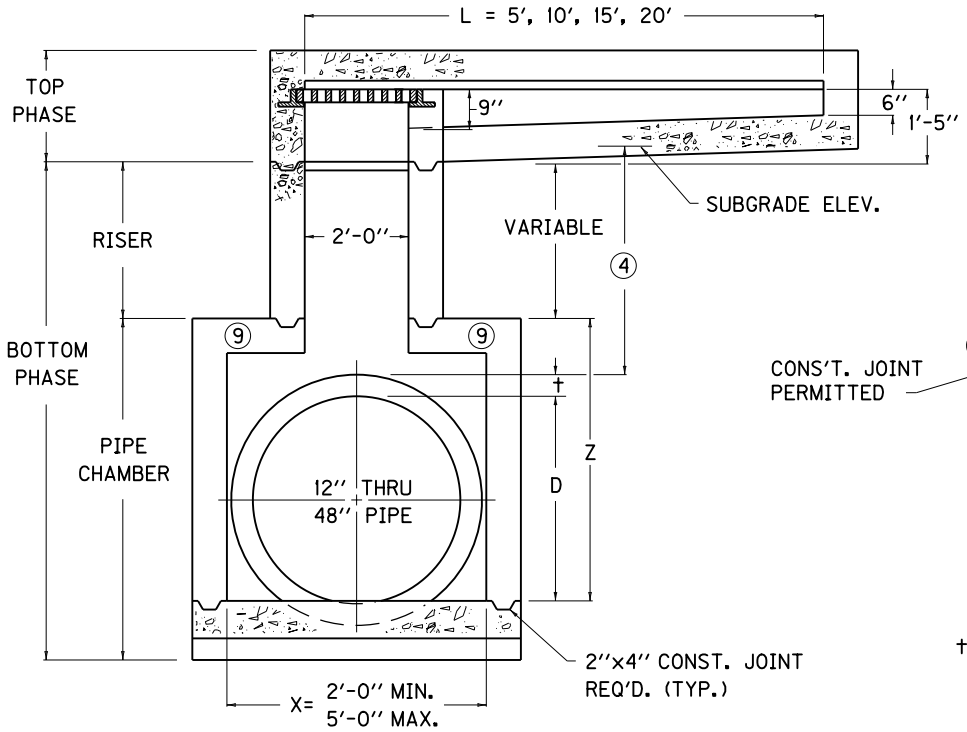

SECTION A-A

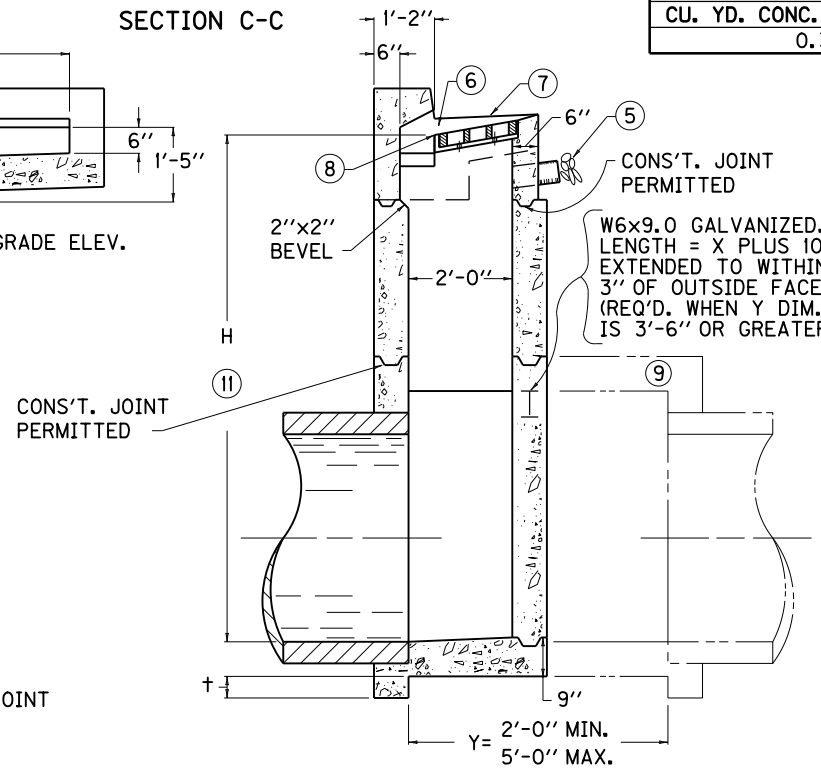

SECTION B-B

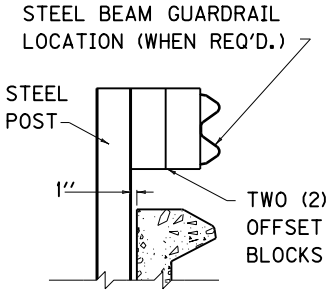

GUARDRAIL DETAIL

USE WITH CUR. STD. DWGS.:
RDB-281, RDB-282, RDB-283,
RDB-400, RDB-410, RDB-420.

KENTUCKY
DEPARTMENT OF HIGHWAYS

CURB BOX INLET
TYPE B
(DETAIL DRAWING)

STANDARD DRAWING NO. RDB-280-05

SUBMITTED David Kratt — DIRECTOR DIVISION OF DESIGN — 11-21-07 DATE

APPROVED Marilyn Mathews — STATE HIGHWAY ENGINEER — 11-21-07 DATE

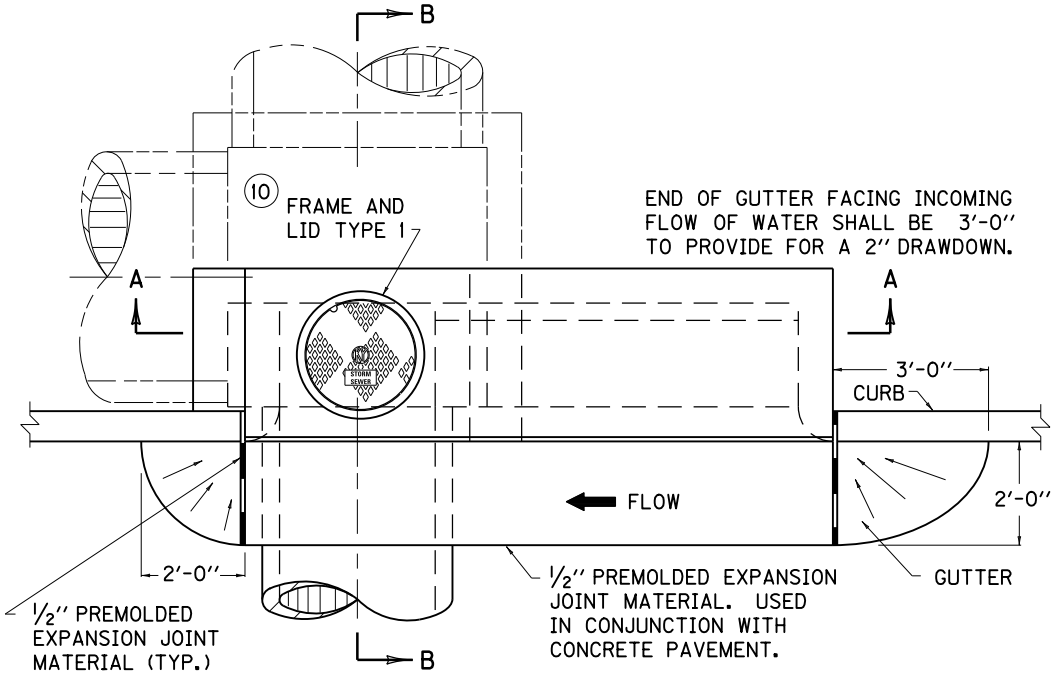

PLAN VIEW

~ NOTES ~

1. INLET SHALL BE CONSTRUCTED IN TWO PHASES (BOTTOM AND TOP)
   BID ITEM: CURB BOX INLET TYPE A (Δ)
   Δ (B) = BOTTOM PHASE ONLY, Δ (T) = TOP PHASE ONLY
   NO SUFFIX INDICATES COMPLETE INLET.
2. SEE CUR. STD. DWG. RDB-271, RDB-272, RDB-273, RDB-400, RDB-410 AND RDB-420 FOR STEEL PATTERN, DIMENSIONS AND QUANTITIES.
3. ALL WALLS, SLABS AND GUTTERS ARE 8" THICK UNLESS OTHERWISE INDICATED.

(4) 2'-0" DESIRED COVER, 1'-0" MINIMUM COVER.

(5) SPALLS OR CRUSHED STONE AROUND END OF 4" OR 6" PIPE FOR SUBGRADE DRAINAGE.

(6) 2" MINIMUM DRAWDOWN.

(7) GUTTER CROSS SLOPE.

(8) FLOW LINE (2" BELOW NORMAL GUTTERLINE ELEVATION).

(9) LID MAY BE RAISED OR LOWERED IF APPROVED BY THE ENGINEER.

(10) SEE CUR. STD. DWG. RDM-100 FOR FRAME AND LID TYPE 1.

11. NOTE: "†" IS CONCRETE PIPE WALL THICKNESS OR METAL PIPE CORRUGATION DEPTH.

(12) MINIMUM HEIGHTS
   H = Z + 1'-8" FOR STANDARD CURB
   H = Z + 1'-10" FOR ISLAND CURB
   H = Z + 1'-5" FOR BARRIER CURB

(13) CHAMBER MAY BE SHIFTED TO ROADWAY SIDE OF BOX PROVIDED THERE IS 1'-0" MINIMUM COVER BETWEEN SUBGRADE ELEVATION AND TOP OF PIPE.

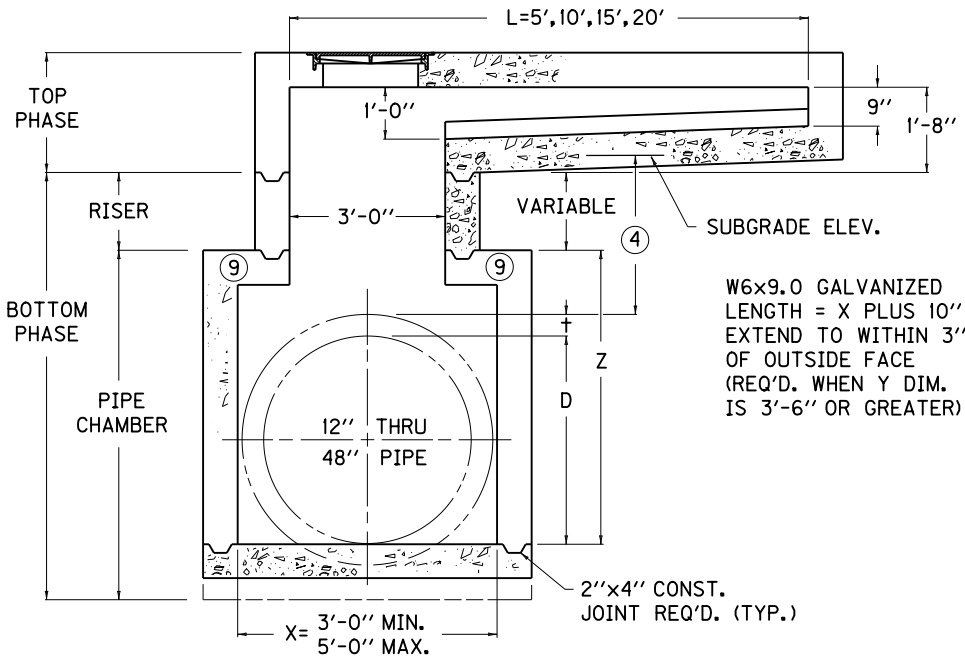

SECTION A-A

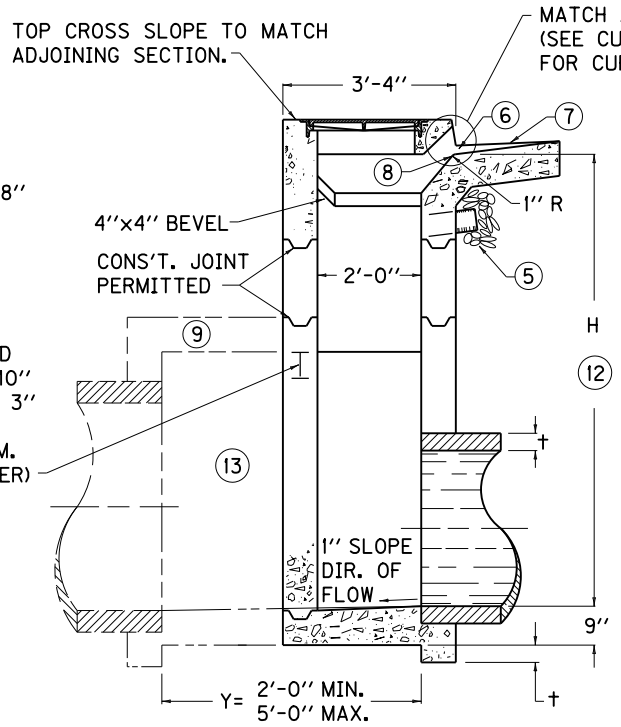

SECTION B-B

RISER
CU. YD. CONC. PER FT. HT.
0.3

USE WITH CUR. STD. DWGS, RDB-271, RDB-272, RDB-273, RDB-400, RDB-410, RDB-420 AND RDM-100.

KENTUCKY
DEPARTMENT OF HIGHWAYS

CURB BOX INLET
TYPE A
(DETAIL DRAWING)

STANDARD DRAWING NO. RDB-270-08

SUBMITTED David Kratt — DIRECTOR DIVISION OF DESIGN — 11-21-07 DATE

APPROVED Marilyn Mathews — STATE HIGHWAY ENGINEER — 11-21-07 DATE

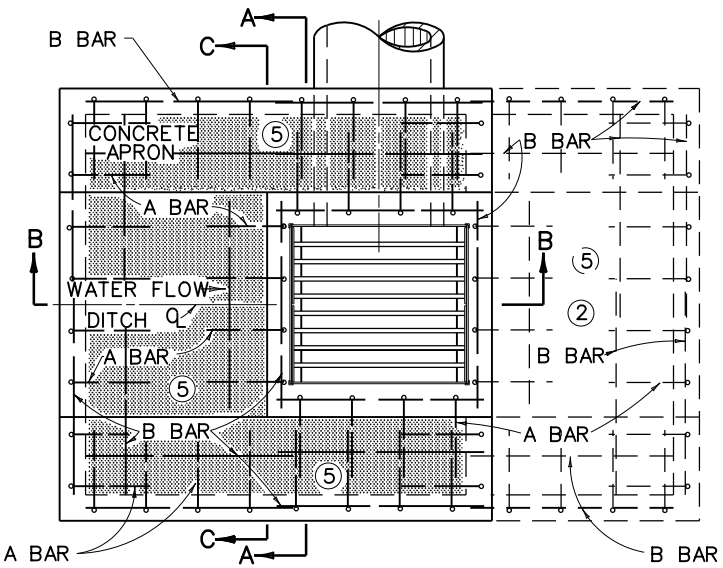

PLAN VIEW

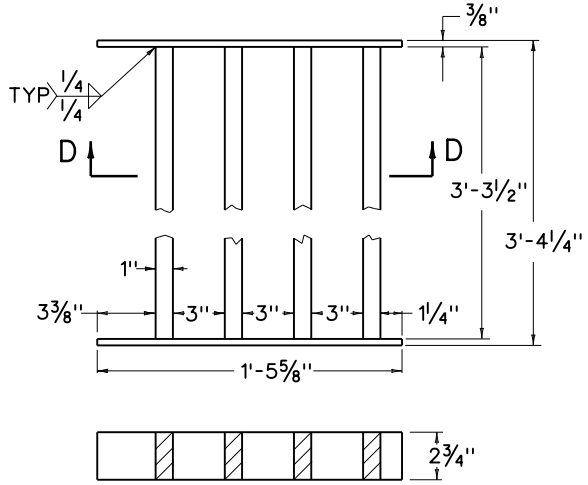

SECTION D-D
DETAIL OF GRATE
(TWO REQUIRED)

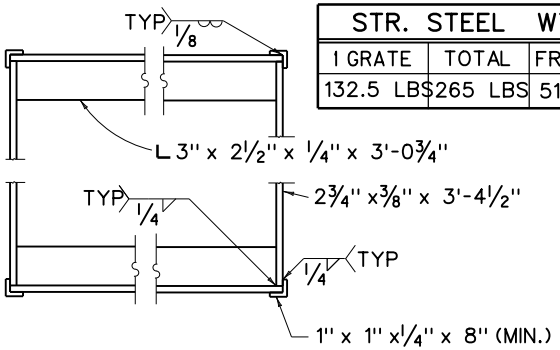

DETAIL OF FRAME

STR. STEEL WTS.		
1 GRATE	TOTAL	FRAME
132.5 LBS	265 LBS	51 LBS

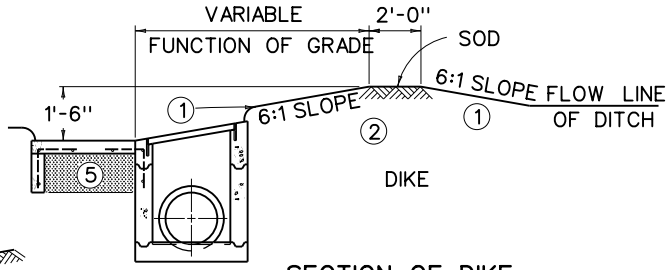

SECTION OF DIKE

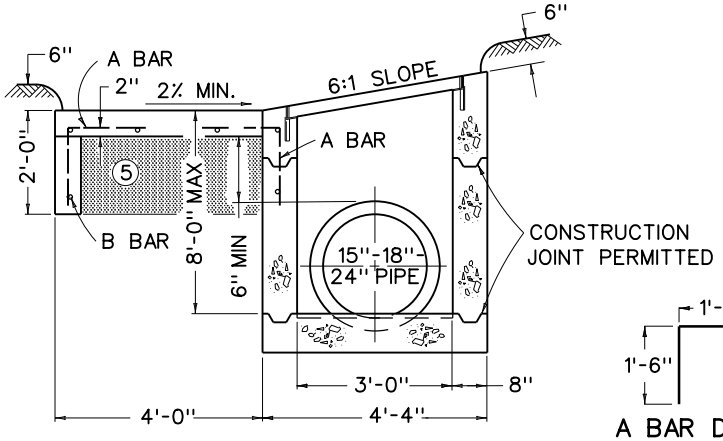

SECTION B-B

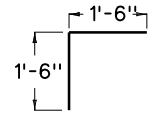

A BAR DETAIL

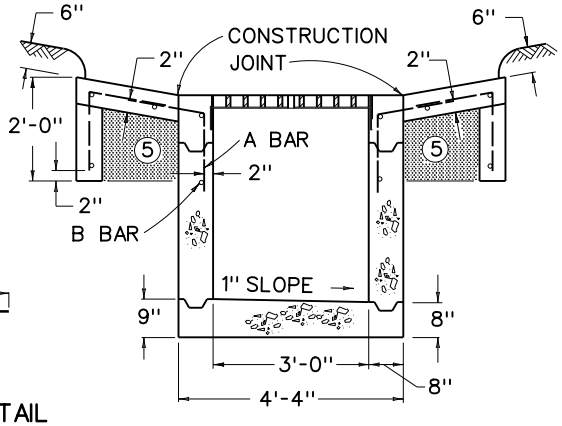

SECTION A-A

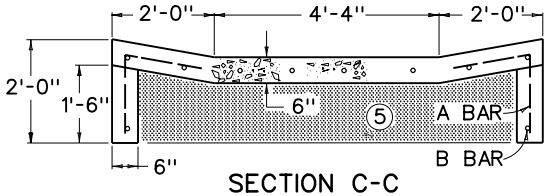

SECTION C-C

BILL OF REINFORCEMENT

BAR	NO. OF BARS	SIZE	LENGTH	APPROX. SPACING
A	40 OR 56	#5	3'-0"	1'-0" C TO C
B	25 OR 40	#4	4'-0"	AS SHOWN

NOTE: PRIMARY USE (ROADSIDE DITCH LOCATION)

NOTES

BASIS OF PAYMENT

DOWNSTREAM DIKE COMPLETE AND IN PLACE IS INCLUDED IN THE CONTRACT UNIT PRICE OF THE INLET. SODDING IS NOT INCLUDED.

CONSTRUCTION REQUIREMENTS

1. 6:1 SLOPES ARE WITH REFERENCE TO DITCH GRADE.
2. WHEN A BOX INLET IS PLACED IN A SAG, OMIT THE EARTH DIKE AND LONGITUDINAL SLOPE OF THE GRATE AND PROVIDE A CONCRETE APRON ON EACH SIDE OF THE INLET.
3. RATE OF INCREASE OR DECREASE 0.36 CU. YD. PER FOOT IN HEIGHT.
4. DEDUCT APPROX. 0.1 CU. YD. OF CONCRETE PER PIPE.
5. ▒ COMPACT THIS VOLUME WITH D.G.A. BASE OR GRAVEL BASE AND INCLUDE IN THE UNIT PRICE OF THE BOX.

APPROX. QUANTITIES

TYPE	CONCRETE 3'-9" ③ BOX	REINF. STEEL
SAG	4.4 CU. YD.④	282 LBS
GRADE	3.4 CU. YD.④	192 LBS

KENTUCKY
DEPARTMENT OF HIGHWAYS

DROP BOX
INLET
TYPE 1

STANDARD DRAWING NO. RDB-001-11

SUBMITTED John B. Lochstine, DIRECTOR DIVISION OF DESIGN — DATE 12-1-99

APPROVED J. M. Yowell, STATE HIGHWAY ENGINEER — DATE 12-1-99

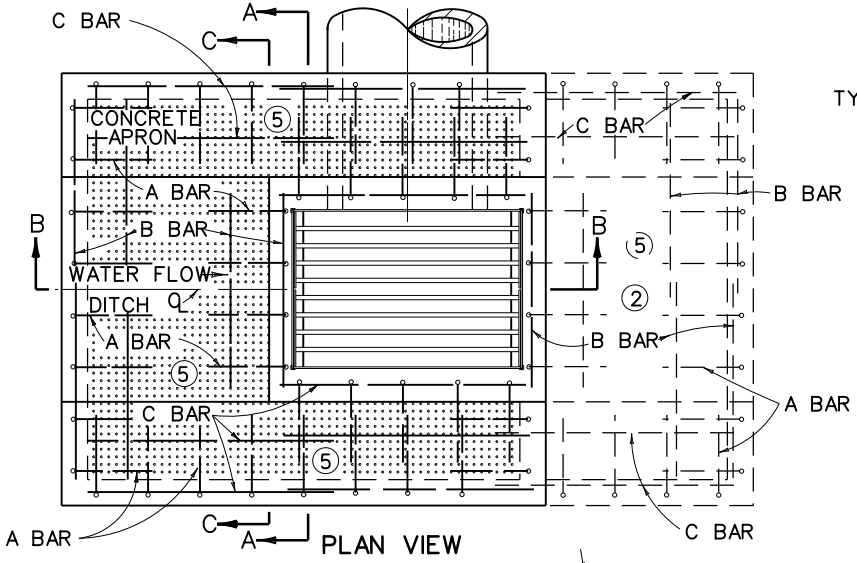

PLAN VIEW

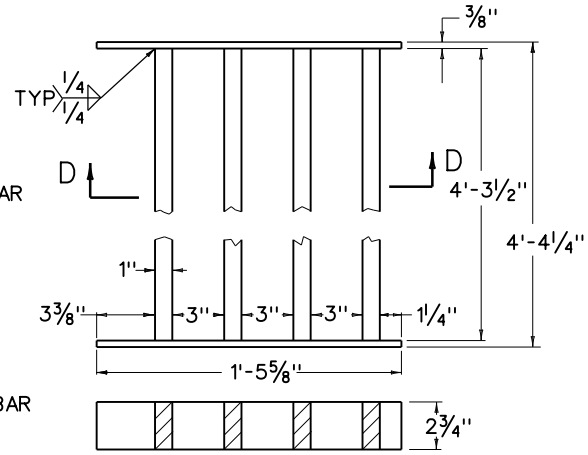

SECTION D-D
DETAIL OF GRATE
(TWO REQUIRED)

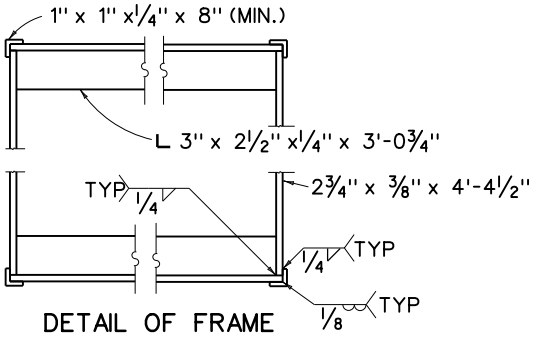

DETAIL OF FRAME

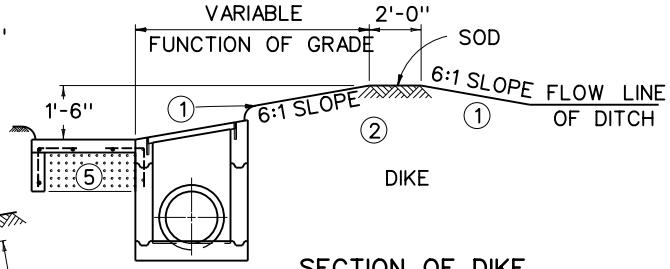

SECTION OF DIKE

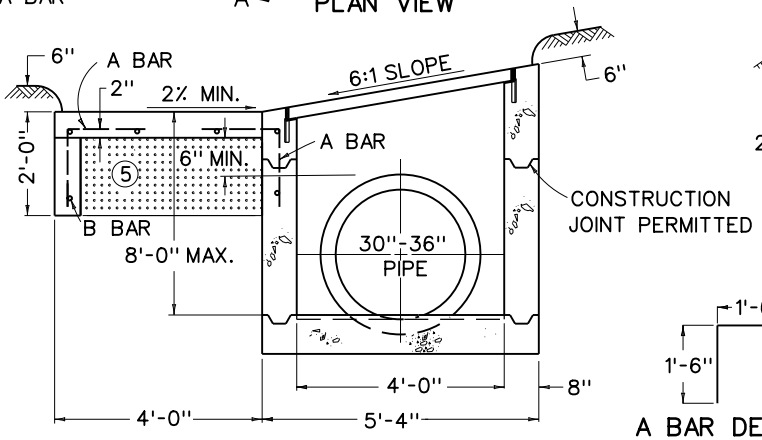

SECTION B-B

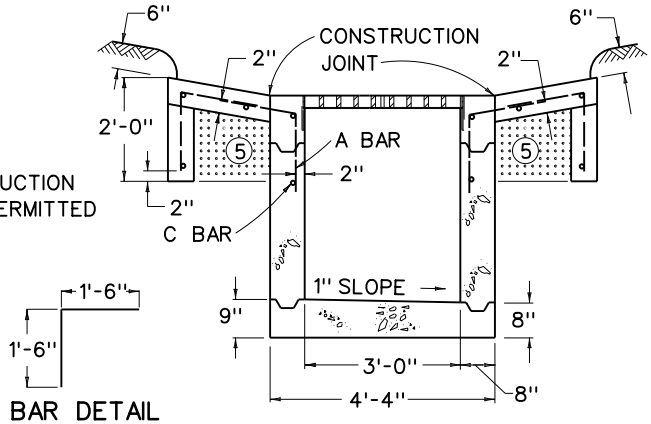

SECTION A-A

A BAR DETAIL

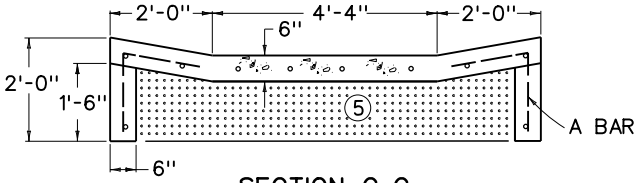

SECTION C-C

BILL OF REINFORCEMENT

BAR	NO. OF BARS	SIZE	LENGTH	APPROX. SPACING
A	44 OR 60	#5	3'-0"	1'-0" C TO C
B	9 OR 18	#4	3'-9"	AS SHOWN
C	16 OR 22	#4	4'-9"	AS SHOWN

NOTE: PRIMARY USE (ROADSIDE DITCH LOCATION)

NOTES

BASIS OF PAYMENT

DOWNSTREAM DIKE COMPLETE AND IN PLACE IS INCLUDED IN THE CONTRACT UNIT PRICE OF THE INLET. SODDING IS NOT INCLUDED.

CONSTRUCTION REQUIREMENTS

1. 6:1 SLOPES ARE WITH REFERENCE TO DITCH GRADE.
2. WHEN A BOX INLET IS PLACED IN A SAG, OMIT THE EARTH DIKE AND LONGITUDINAL SLOPE OF THE GRATE, AND PROVIDE A CONCRETE APRON ON EACH SIDE OF THE INLET.
3. RATE OF INCREASE OR DECREASE 0.41 CU. YD. PER FOOT IN HEIGHT.
4. DEDUCT APPROX. 0.2 CU. YD. OF CONCRETE FOR A 30" PIPE AND 0.3 CU. YD. OF CONCRETE FOR A 36" PIPE.
5. COMPACT THIS VOLUME WITH D.G.A. BASE OR GRAVEL BASE AND INCLUDE IN THE UNIT PRICE OF THE BOX.

STR. STEEL WTS.		
1 GRATE	TOTAL	FRAME
170 LBS	340 LBS	58 LBS

APPROX. QUANTITIES

TYPE	CONCRETE 3'-9" ③ BOX	REINF. STEEL
SAG	4.8 CU. YD. ④	303 LBS
GRADE	3.9 CU. YD. ④	212 LBS

KENTUCKY
DEPARTMENT OF HIGHWAYS

DROP BOX INLET TYPE 2

STANDARD DRAWING NO. RDB-002-11

SUBMITTED John B. Scholtens, DIRECTOR DIVISION OF DESIGN — DATE 12-1-99

APPROVED F. M. Howell, STATE HIGHWAY ENGINEER — DATE 12-1-99

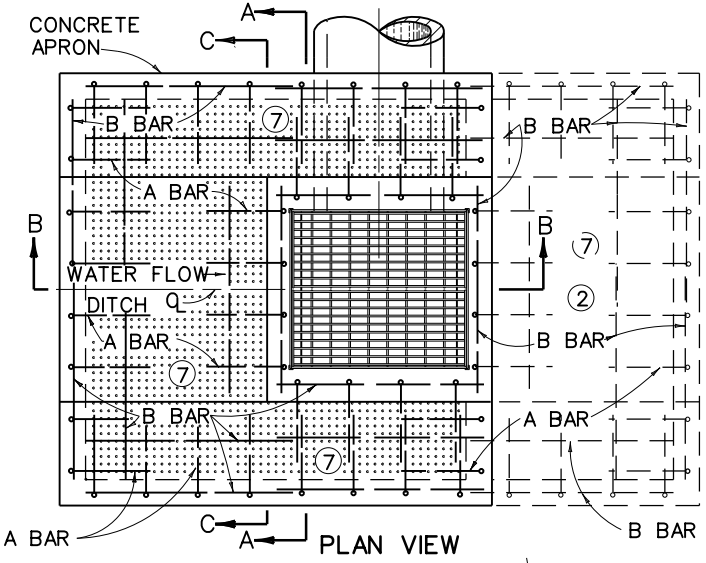

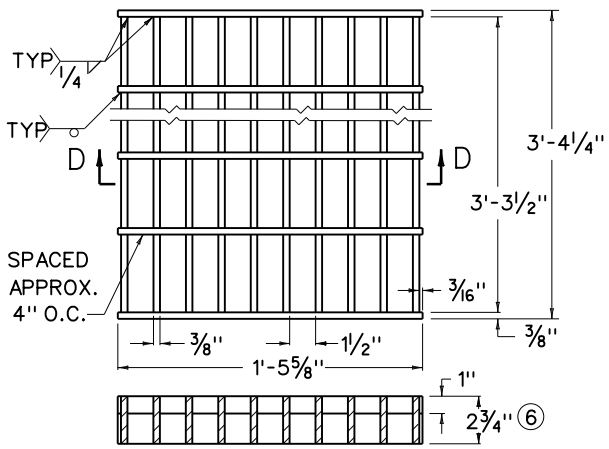

SECTION D-D
DETAIL OF GRATE
(TWO REQUIRED)

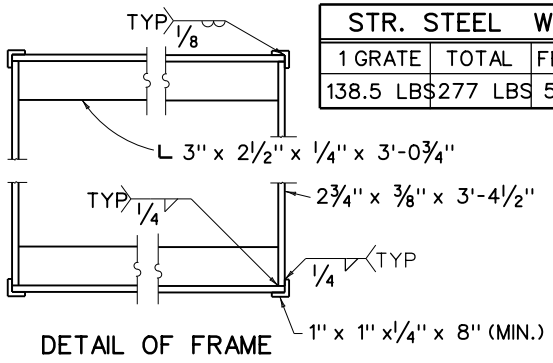

DETAIL OF FRAME

STR. STEEL WTS.		
1 GRATE	TOTAL	FRAME
138.5 LBS	277 LBS	51 LBS

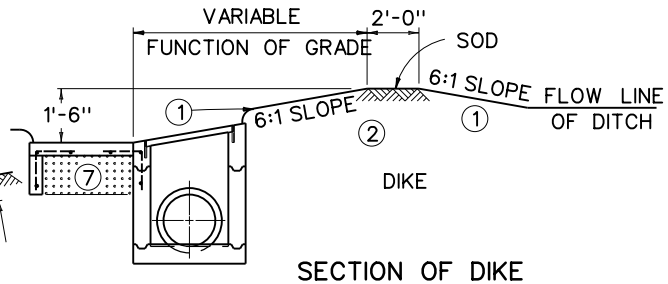

SECTION OF DIKE

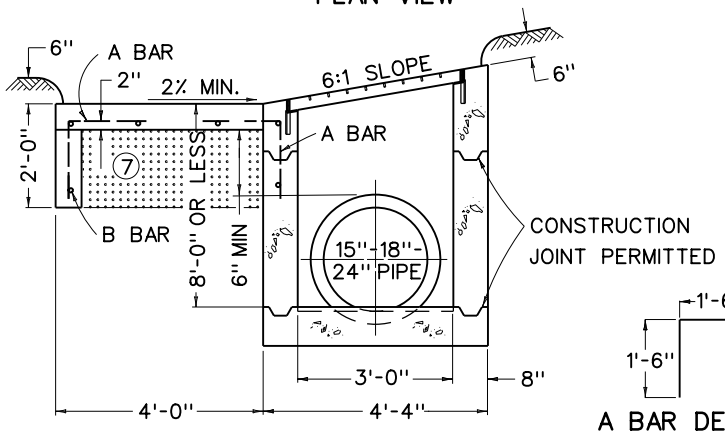

SECTION B-B

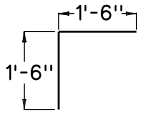

A BAR DETAIL

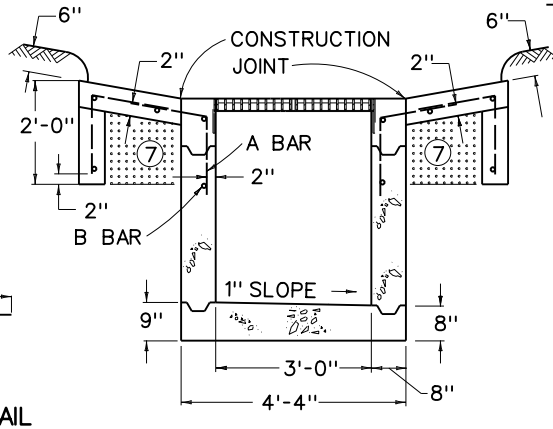

SECTION A-A

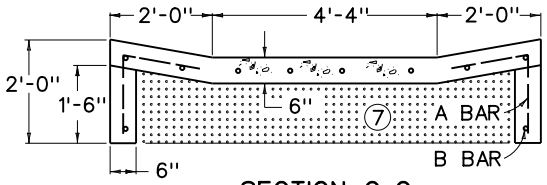

SECTION C-C

BILL OF REINFORCEMENT

BAR	NO. OF BARS	SIZE	LENGTH	APPROX. SPACING
A	40 OR 56	#5	3'-0"	1'-0" C TO C
B	25 OR 40	#4	4'-0"	AS SHOWN

NOTES

BASIS OF PAYMENT

DOWNSTREAM DIKE COMPLETE AND IN PLACE IS INCLUDED IN THE CONTRACT UNIT PRICE OF THE INLET. SODDING IS NOT INCLUDED.

CONSTRUCTION REQUIREMENTS

1. 6:1 SLOPES ARE WITH REFERENCE TO DITCH GRADE.
2. WHEN A BOX INLET IS PLACED IN A SAG, OMIT THE EARTH DIKE AND LONGITUDINAL SLOPE OF THE GRATE, AND PROVIDE A CONCRETE APRON ON EACH SIDE OF THE INLET.
3. RATE OF INCREASE OR DECREASE 0.36 CU. YD. PER FOOT IN HEIGHT.
4. DEDUCT APPROX. 0.1 CU. YD. OF CONCRETE PER PIPE.
5. RELIANCE STEEL (CAT. NO. H2-12D) AND GARY STEEL (CAT. NO. HW3-D-300) ARE ACCEPTABLE ALTERNATES PROVIDED MATCHED GRATES ARE SUPPLIED.
6. THE 2 3/4" BAR SHALL BE NOTCHED TO RECEIVE THE 1" BAR.
7. COMPACT THIS VOLUME WITH D.G.A. BASE OR GRAVEL BASE AND INCLUDE IN THE UNIT PRICE OF THE BOX.

APPROX. QUANTITIES

TYPE	CONCRETE 3'-9" ③ BOX	REINF. STEEL
SAG	4.4 CU. YD.④	282 LBS
GRADE	3.4 CU. YD.④	192 LBS

NOTE: PRIMARY USE (ROADSIDE DITCH LOCATION)

KENTUCKY DEPARTMENT OF HIGHWAYS

DROP BOX INLET TYPE 3

STANDARD DRAWING NO. RDB-003-07

SUBMITTED David Kratt, DIRECTOR DIVISION OF DESIGN — 11-21-07 DATE

APPROVED Marilyn Mathews, STATE HIGHWAY ENGINEER — 11-21-07 DATE

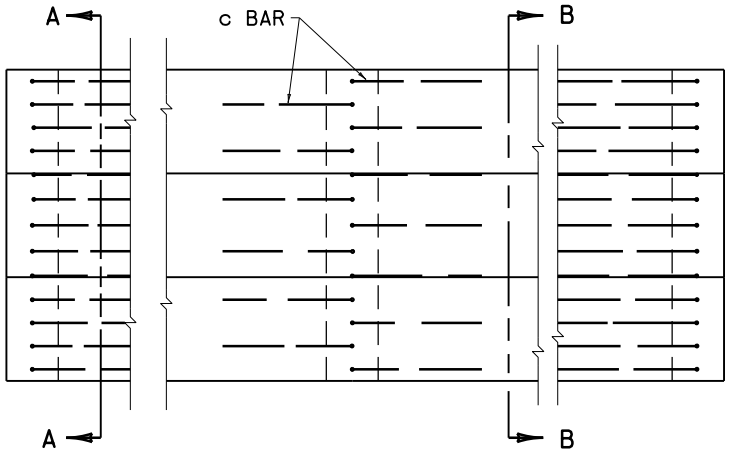

PLAN VIEW

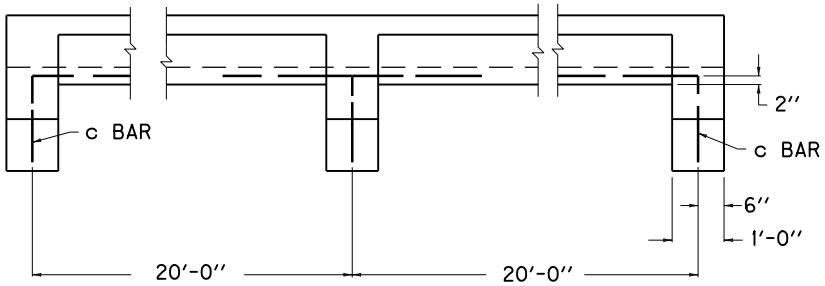

ELEVATION VIEW

NOTES

1. ROADWAY EXCAVATION SHALL BE PAID FROM THE TOP OF THE PAVED DITCH SLAB TO THE ORIGINAL GROUND. THE EXCAVATION FROM THE TOP OF THE CONCRETE OF THE PAVED DITCH DOWN, WILL BE INCLUDED IN THE PRICE PAID FOR THE PAVED DITCH INCLUDING THE EXCAVATION FOR THE INTERMEDIATE AND END ANCHORS, AND NO DIRECT PAYMENT WILL BE MADE FOR THIS EXCAVATION.
2. ESTIMATE 0.080 CU. YDS. CLASS A CONCRETE PER LINEAR FOOT OF PAVED DITCH AND 0.398 CU. YDS. CLASS A CONCRETE PER ANCHOR BASED ON MINIMUM DIMENSIONS SHOWN ON THIS DRAWING.
3. THE SECTION SHOWN WITHIN THE MINIMUM DIMENSION IS ESTIMATED AT 0.72 SQ. YD. PER LIN. FT.
4. COMPACTION, FINISHING AND CURING SHALL BE THE SAME AS REQUIRED FOR CONCRETE SIDEWALK.
5. IF THE CONTRACTOR ELECTS TO USE A CONSTRUCTION JOINT IN THE POURING OF THE PAVED DITCH, IT SHALL BE CONSTRUCTED AS DETAILED.
6. ANY LENGTH OF LONGITUDINAL REINFORCING STEEL WILL BE PERMITTED PROVIDED A 1'-0'' LAP IS USED IN THE SPLICE. ADEQUATE TIES AT THE SPLICE SHALL BE REQUIRED.

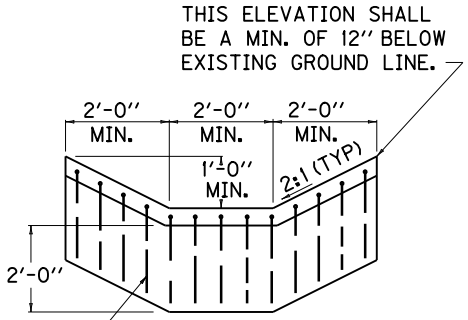

SECTION A-A

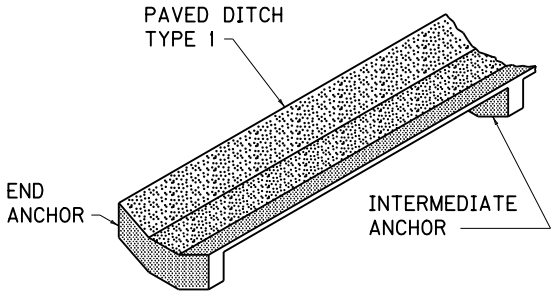

ISOMETRIC VIEW

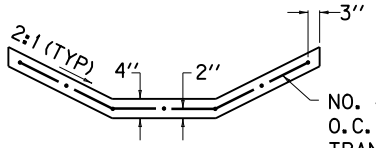

NO. 4 BARS SPACED 1'-0'' O.C. LONGITUDINALLY AND TRANSVERSELY THROUGHOUT THE SECTION. (IN ADDITION TO ANCHOR STEEL).

SECTION B-B

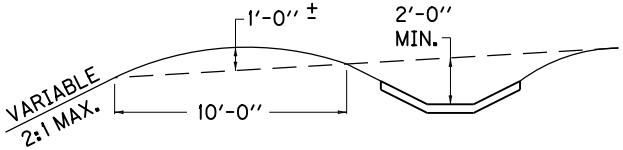

TYPICAL PAVED DITCH
(INTERCEPTOR DITCH)

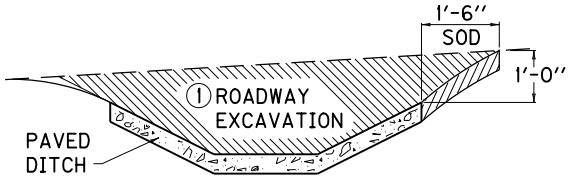

SHOULD THE TERRAIN OF THE EXISTING GROUND BE SO THAT WATER WOULD DRAIN INTO THE DITCH FROM BOTH SIDES, THEN SODDING WILL BE REQUIRED ON BOTH SIDES OF THE DITCH.

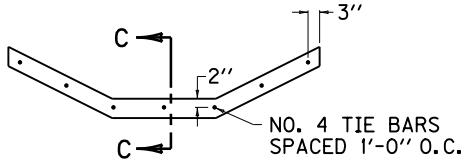

TIE BAR SECTIONAL VIEW

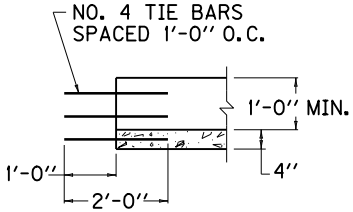

SECTION C-C

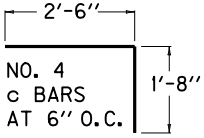

c BAR DETAIL

APPROX. STEEL QUANTITIES FOR MINIMUM SECTION SHOWN	
END ANCHORS (EACH)	36.19 LBS.
INTERMEDIATE ANCHORS (EACH)	36.19 LBS.
CONSTRUCTION JOINTS (EACH)	9.352 LBS.
BARS PER SQ. YD. OF DITCH	12.047 LBS.

KENTUCKY
DEPARTMENT OF HIGHWAYS

PAVED DITCH
TYPE 1

STANDARD DRAWING NO. RDD-001-05

SUBMITTED John B. Scalaterra — DIRECTOR, DIVISION OF DESIGN — 12-1-99 DATE

APPROVED [signature] — STATE HIGHWAY ENGINEER — 12-1-99 DATE

STEP 1

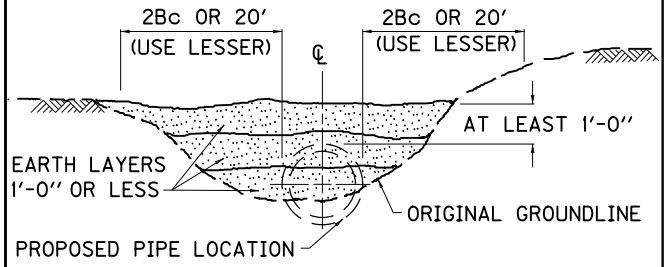

a. IF THE ORIGINAL GROUNDLINE IS AT LEAST 1'-0" ABOVE TOP OF PROPOSED PIPE FOR WIDTH OF 2Bc OR 20' (WHICHEVER IS LESS) ON EACH SIDE OF THE PIPE, GO DIRECTLY TO "STEP 2".

b. IF ORIGINAL GROUNDLINE IS NOT AT LEAST 1'-0" ABOVE TOP OF PROPOSED PIPE, COMPACT EMBANKMENT IN LAYERS 1'-0" OR LESS TO ELEVATION AND WIDTH SHOWN. MEET DENSITY REQUIREMENTS FOR PROPOSED EMBANKMENT .

STEP 2

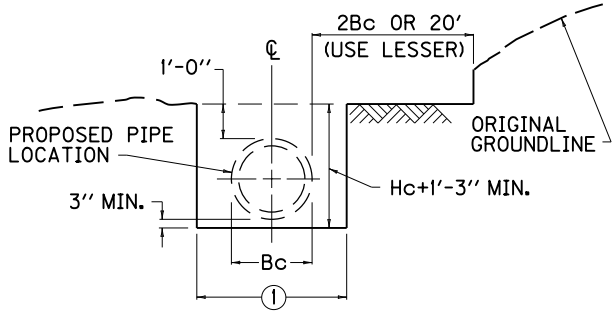

a. EXCAVATE TO WITHIN 1'-0" ABOVE TOP OF PROPOSED PIPE A WIDTH OF 2Bc OR 20' (USE LESSER) ON EACH SIDE OF PIPE.

b. EXCAVATE TRENCH TO WIDTH AND DEPTH SHOWN.

1 Bc + 24" FOR PIPE 36" DIA. OR LESS.
Bc + 48" FOR PIPE GREATER THAN 36" DIA.

STEP 3

ROCK FOUNDATION DETAILS

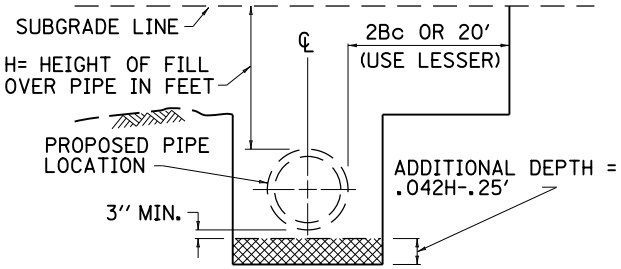

a. IF ROCK FOUNDATION IS NOT ENCOUNTERED, GO DIRECTLY TO "STEP 4".

b. IF ROCK FOUNDATION IS ENCOUNTERED, EXCAVATE TRENCH ADDITIONAL DEPTH USING FORMULA GIVEN. THIS ADDITIONAL DEPTH SHALL BE A MIN. OF 4" AND SHALL NOT EXCEED 24"

c. BACKFILL ADDITIONAL EXCAVATION AREA WITH COMPACTED BEDDING MATERIAL IN LAYERS 6" OR LESS.

STEP 4

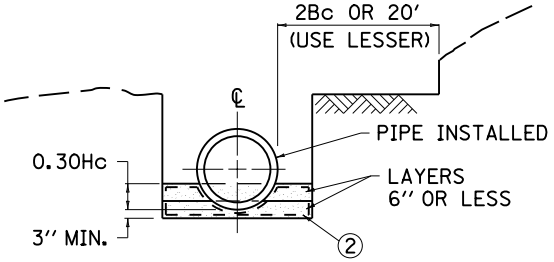

a. COMPACT BEDDING IN TRENCH IN LAYERS 6" OR LESS TO WIDTH AND ELEVATION SHOWN.

b. EXCAVATE A GROOVE IN THE COMPACTED BEDDING TO CONFORM TO THE OUTSIDE OF THE PIPE. AFTER EXCAVATION OF THE GROOVE, APPROXIMATELY 4" OF BEDDING SHOULD REMAIN BELOW THE OUTSIDE INVERT OF THE PIPE. THE CRADLE SHALL BE GAGED FOR SHAPE AND SLOPE BY STRIKING OR DRAWING A TEMPLATE THROUGH THE GROOVE IMMEDIATELY BEFORE PLACING EACH SECTION OF PIPE.

c. INSTALL PIPE AT CORRECT ALIGNMENT AND ELEVATION. RECOMPACT ANY LOOSE BEDDING DISTURBED DURING INSTALLATION.

2 WRAP BEDDING MATERIAL IN GEOTEXTILE FABRIC WHEN THE STANDARD SPECIFICATIONS SPECIFIES.

STEP 5

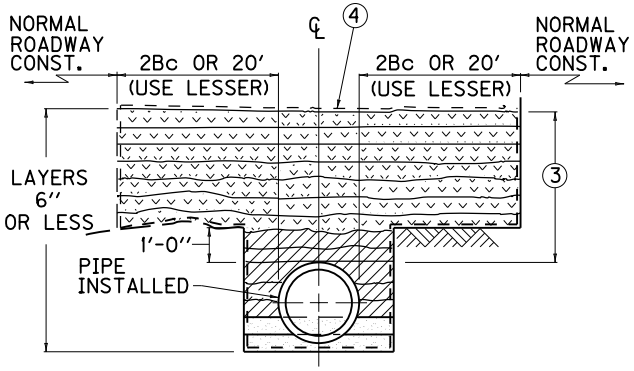

3 4'-0" REQUIRED FOR CONSTRUCTION LOADING IF COVER HEIGHT PERMITS.

a. COMPACT REQUIRED BACKFILL MATERIAL IN LAYERS 6" OR LESS TO 1'-0" ABOVE TOP OF PIPE.

b. COMPACT REQUIRED BACKFILL MATERIAL TO ELEV. 3 ABOVE TOP OF PIPE IN LAYERS OF 6" OR LESS.

c. PROCEED WITH NORMAL ROADWAY CONSTRUCTION.

4 WRAP BEDDING MATERIAL IN GEOTEXTILE FABRIC WHEN THE STANDARD SPECIFICATIONS SPECIFIES.

SEE CUR. STD. DWG. RDI-025 FOR TRENCH CONDITIONS

~ PIPE SHAPES ~

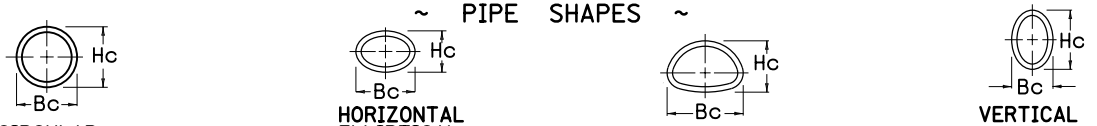

KENTUCKY
DEPARTMENT OF HIGHWAYS

PIPE BEDDING FOR CULVERTS, ENTRANCE AND STORM SEWER PIPE

STANDARD DRAWING NO. RDI-020-08

SUBMITTED: DIRECTOR DIVISION OF DESIGN — DATE 12-2-02

APPROVED: STATE HIGHWAY ENGINEER — DATE 12-2-02

STEP 1

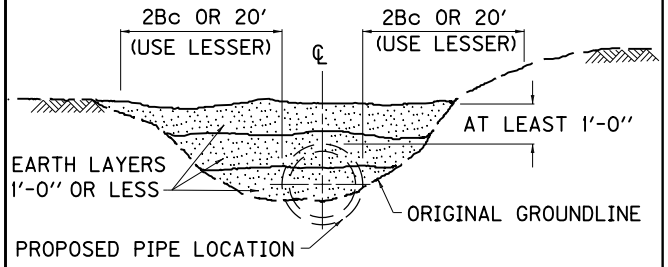

a. IF THE ORIGINAL GROUNDLINE IS AT LEAST 1'-0" ABOVE TOP OF PROPOSED PIPE FOR WIDTH OF 2Bc OR 20' (WHICHEVER IS LESS) ON EACH SIDE OF THE PIPE, GO DIRECTLY TO "STEP 2".

b. IF ORIGINAL GROUNDLINE IS NOT AT LEAST 1'-0" ABOVE TOP OF PROPOSED PIPE, COMPACT EMBANKMENT IN LAYERS 1'-0" OR LESS TO ELEVATION AND WIDTH SHOWN. MEET DENSITY REQUIREMENTS FOR PROPOSED EMBANKMENT .

STEP 2

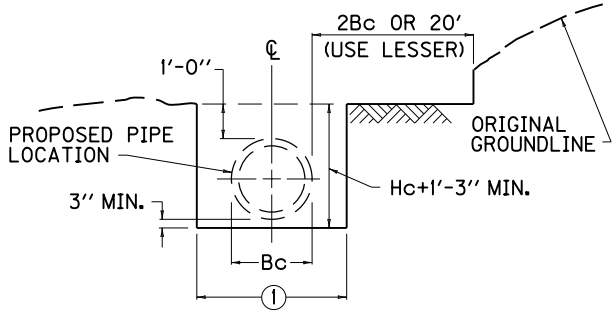

a. EXCAVATE TO WITHIN 1'-0" ABOVE TOP OF PROPOSED PIPE A WIDTH OF 2Bc OR 20' (USE LESSER) ON EACH SIDE OF PIPE.

b. EXCAVATE TRENCH TO WIDTH AND DEPTH SHOWN.

1 Bc + 24" FOR PIPE 36" DIA. OR LESS.
Bc + 48" FOR PIPE GREATER THAN 36" DIA.

STEP 3

ROCK FOUNDATION DETAILS

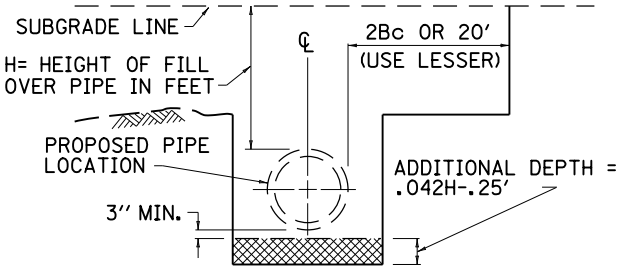

a. IF ROCK FOUNDATION IS NOT ENCOUNTERED, GO DIRECTLY TO "STEP 4".

b. IF ROCK FOUNDATION IS ENCOUNTERED, EXCAVATE TRENCH ADDITIONAL DEPTH USING FORMULA GIVEN. THIS ADDITIONAL DEPTH SHALL BE A MIN. OF 4" AND SHALL NOT EXCEED 24"

c. BACKFILL ADDITIONAL EXCAVATION AREA WITH COMPACTED BEDDING MATERIAL IN LAYERS 6" OR LESS.

STEP 4

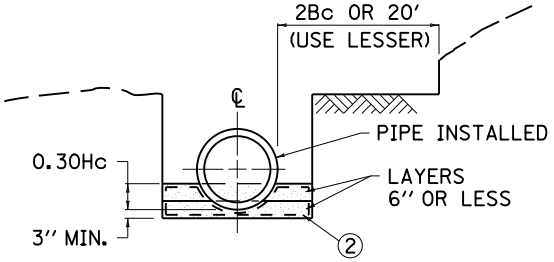

a. COMPACT BEDDING IN TRENCH IN LAYERS 6" OR LESS TO WIDTH AND ELEVATION SHOWN.

b. EXCAVATE A GROOVE IN THE COMPACTED BEDDING TO CONFORM TO THE OUTSIDE OF THE PIPE. AFTER EXCAVATION OF THE GROOVE, APPROXIMATELY 4" OF BEDDING SHOULD REMAIN BELOW THE OUTSIDE INVERT OF THE PIPE. THE CRADLE SHALL BE GAGED FOR SHAPE AND SLOPE BY STRIKING OR DRAWING A TEMPLATE THROUGH THE GROOVE IMMEDIATELY BEFORE PLACING EACH SECTION OF PIPE.

c. INSTALL PIPE AT CORRECT ALIGNMENT AND ELEVATION. RECOMPACT ANY LOOSE BEDDING DISTURBED DURING INSTALLATION.

2 WRAP BEDDING MATERIAL IN GEOTEXTILE FABRIC WHEN THE STANDARD SPECIFICATIONS SPECIFIES.

STEP 5

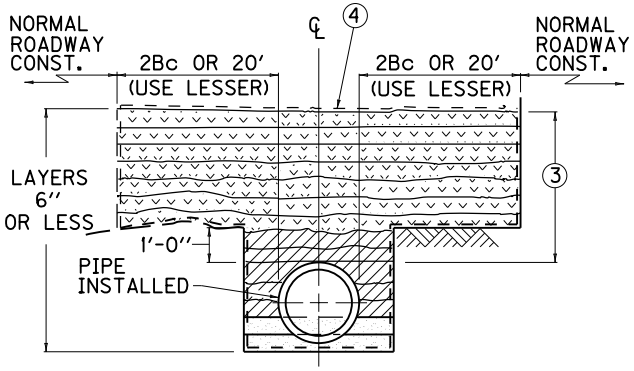

3 4'-0" REQUIRED FOR CONSTRUCTION LOADING IF COVER HEIGHT PERMITS.

a. COMPACT REQUIRED BACKFILL MATERIAL IN LAYERS 6" OR LESS TO 1'-0" ABOVE TOP OF PIPE.

b. COMPACT REQUIRED BACKFILL MATERIAL TO ELEV. 3 ABOVE TOP OF PIPE IN LAYERS OF 6" OR LESS.

c. PROCEED WITH NORMAL ROADWAY CONSTRUCTION.

4 WRAP BEDDING MATERIAL IN GEOTEXTILE FABRIC WHEN THE STANDARD SPECIFICATIONS SPECIFIES.

SEE CUR. STD. DWG. RDI-025 FOR TRENCH CONDITIONS

~ PIPE SHAPES ~

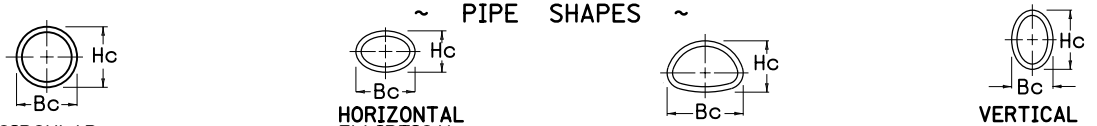

KENTUCKY
DEPARTMENT OF HIGHWAYS

PIPE BEDDING FOR CULVERTS, ENTRANCE AND STORM SEWER PIPE

STANDARD DRAWING NO. RDI-020-08

SUBMITTED: DIRECTOR DIVISION OF DESIGN — DATE 12-2-02

APPROVED: STATE HIGHWAY ENGINEER — DATE 12-2-02

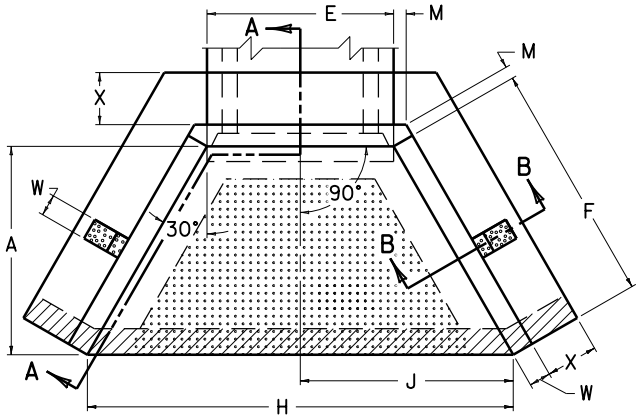

PLAN VIEW

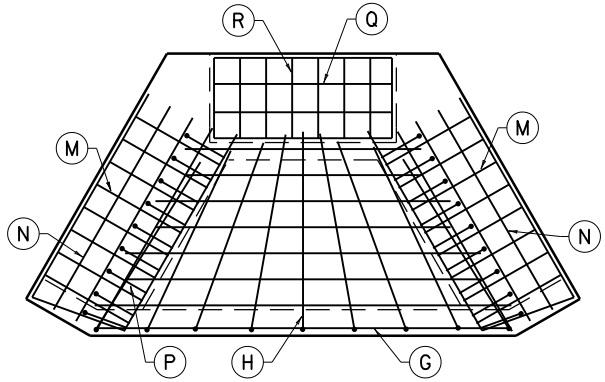

SECTION D-D

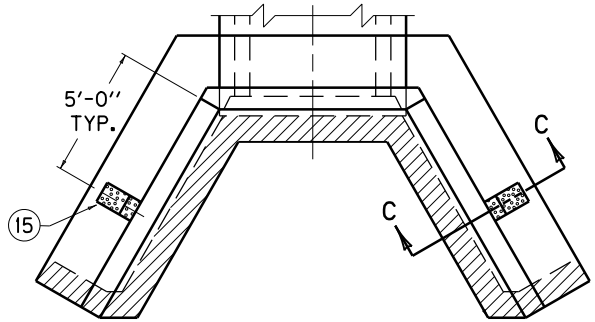

PLAN VIEW
WITHOUT PAVING

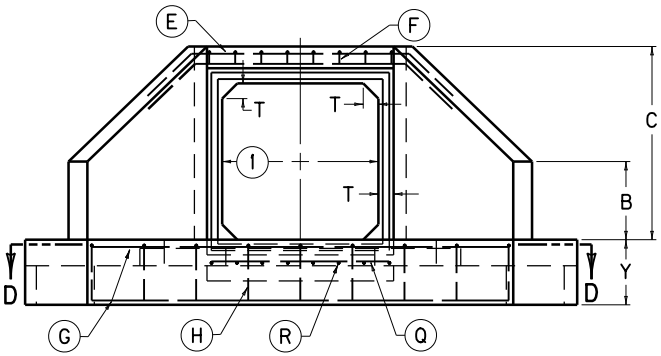

FRONT ELEVATION

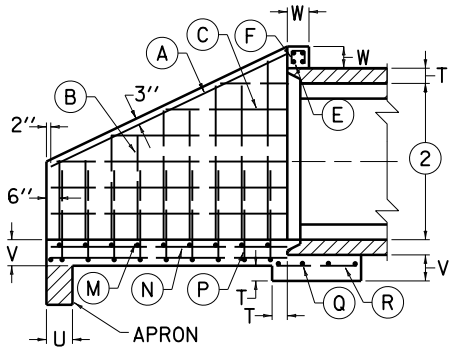

SECTION A-A

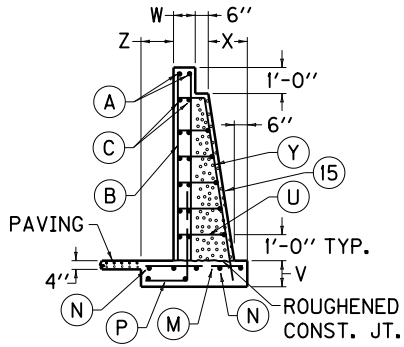

SECTION B-B

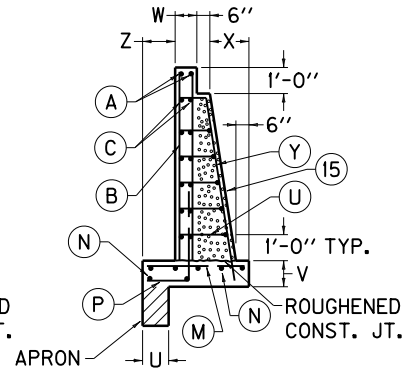

SECTION C-C

NOTES

(1) SPAN OF BOX CULVERT

(2) RISE OF BOX CULVERT

3. FOR DIMENSIONS, QUANTITIES, AND BILL OF REINFORCEMENT SEE CUR. STD. DWGS. RDH-1100, RDH-1200 AND RDH-1300 SERIES.
4. DIMENSIONS FROM FACE OF CONCRETE TO STEEL SHALL BE 2'' CLEAR DISTANCE.
5. ENCIRCLED LETTERS, ◯, INDICATE STEEL BAR LOCATIONS.
6. BARS Ⓑ, Ⓒ, Ⓖ, Ⓜ, Ⓟ AND Ⓤ ARE SPACED 1'-0'' O.C. ALL OTHER BARS SHALL BE EVENLY SPACED.
7. BARS Ⓑ, Ⓒ AND Ⓤ ARE PLACED IN ORDER OF INCREASING LENGTH, BEGINNING AT THE END OF WING, TOP OF WING AND TOP OF COUNTERFORT RESPECTIVELY.
8. HEADWALLS LOCATED AT SHOULDER EDGE SHALL BE PARALLEL TO CENTERLINE OF ROAD.
9. LIMITS OF APRON.
10. LIMITS OF PAVING.
11. LIMITS OF COUNTERFORTS.
12. THESE HEADWALLS ARE DESIGNED BOTH WITH AND WITHOUT PAVING BETWEEN THE WINGS. (SEE PLANS)
13. WHEN PAVING IS REQUIRED; PAVING SHALL BE SLOPED IN DIRECTION OF FLOW EQUAL TO SLOPE OF BOX. FRONT FACE OF HEADWALL AND ENDS OF WINGS SHALL REMAIN VERTICAL.
14. WHEN PAVING IS NOT REQUIRED BARS Ⓗ AND Ⓖ SHALL BE ELIMINATED.

(15) A COUNTERFORT SHALL BE REQUIRED ON A WING WALL WHEN THE BOX RISE IS 8'-0'' OR GREATER AND THE WING WALL IS 15'-0'' OR LONGER.

(LAYOUT AND STEEL PATTERN)

KENTUCKY
DEPARTMENT OF HIGHWAYS

PRECAST BOX CULVERT
HEADWALLS - 0° SKEW
(BOX RISE 6'-0'' OR GREATER)

STANDARD DRAWING NO. RDH-1005-02

SUBMITTED John B. Lochstedt — DIRECTOR DIVISION OF DESIGN — 12-1-99 DATE

APPROVED J. M. Yowell — 12-1-99 DATE

COUNTY OF	ITEM NO.	SHEET NO.

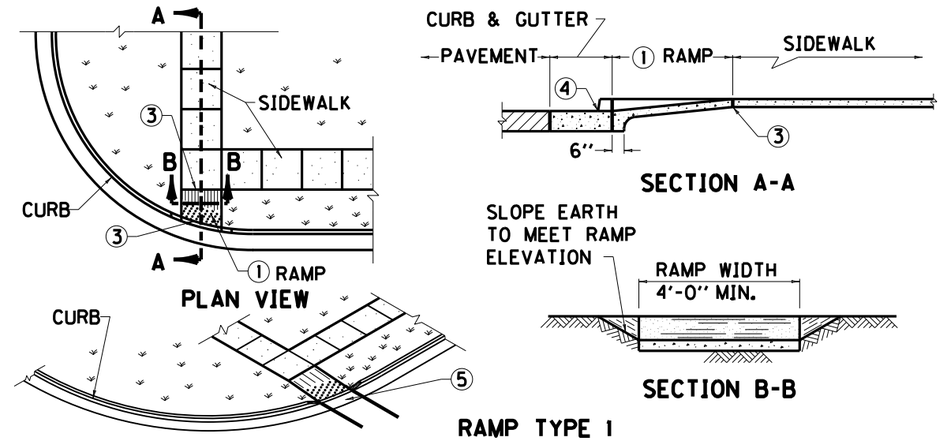

RAMP TYPE 1

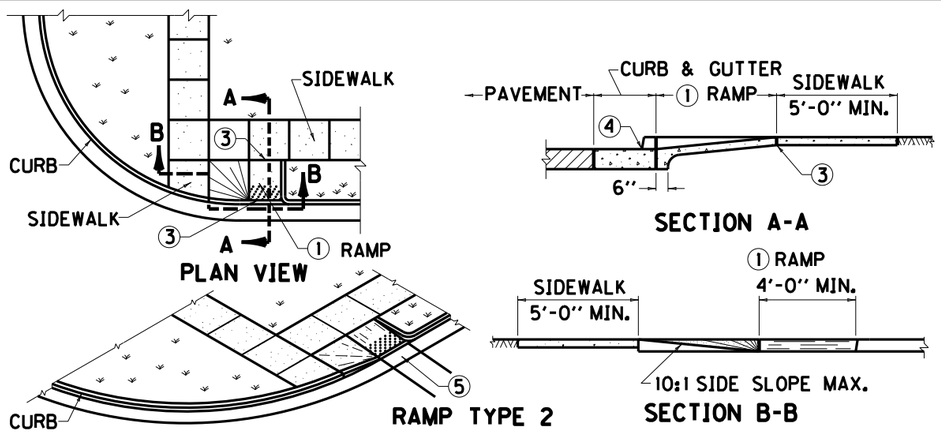

RAMP TYPE 2

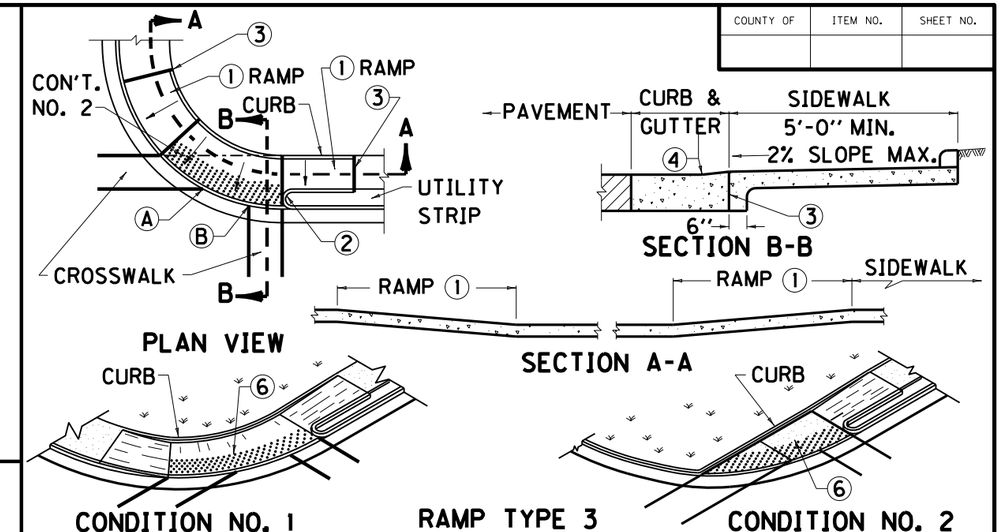

CONDITION NO. 1 RAMP TYPE 3 CONDITION NO. 2

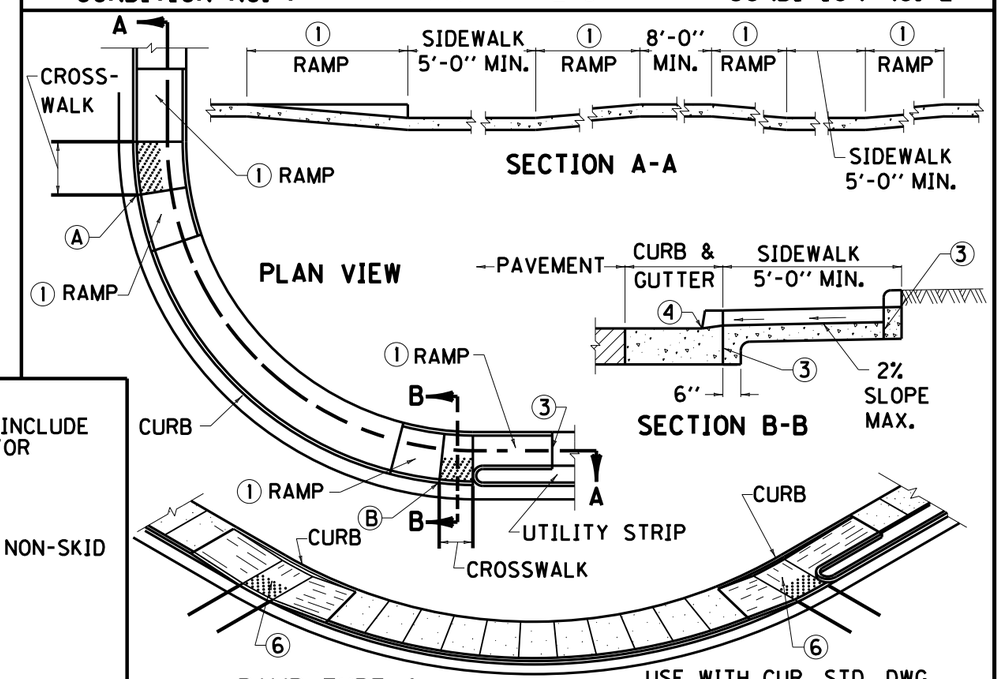

RAMP TYPE 4

USE WITH CUR. STD. DWG. RGX-040

NOTES

RAMPS SHALL BE PAID PER SQ. YARD OF 4" CONC. SIDEWALK AND THE UNIT PRICE SHALL INCLUDE ALL MATERIALS, FORMS, CURB BEHIND RAMP AND LANDING, AND INCIDENTALS NECESSARY FOR CONSTRUCTION.

BID ITEM AND UNIT TO BID:
SIDEWALK-4 INCH CONCRETE - SQYD

THE RAMP SHALL BE CONSTRUCTED OF CLASS "A" CONCRETE. A BROOM FINISH OR EQUAL NON-SKID FINISH IS REQUIRED. DETECTABLE WARNINGS SHALL BE A SEPARATE BID ITEM.

THE NORMAL GUTTER LINE SHALL BE MAINTAINED THROUGH THE AREA OF THE RAMP.

RAMPS SHOULD BE LOCATED WITHIN MARKED LIMITS OF CROSSWALKS.
USE RAMP TYPE 3 WHEN POINT A TO B IS LESS THAN 20 FEET.
USE RAMP TYPE 4 WHEN POINT A TO B IS 20 FEET OR MORE.

1. CURB RAMP GRADE SHALL NOT EXCEED 12:1, CROSS SLOPE SHALL NOT EXCEED 2%. ON RETROFIT CURB RAMPS, GRADES OF 12.5% for 2'-0" OR 10% FOR 5'-0" ARE PERMISSABLE.
2. CURB RETURN REQUIRED WHEN UTILITY STRIP IS 4 FEET OR GREATER. FOR UTILITY STRIPS LESS THAN 4 FEET, THE AREA IS TO BE SURFACED WITH SIDEWALK WITHIN THE RAMP.
3. 1/2" EXPANSION JOINT AT BACK OF CURB LINE AND AT SIDEWALK LINE.
4. NO BUMP PERMITTED. SAME SLOPE AS RAMP AND NOT TO EXCEED 1" IN HEIGHT. RAMPS SHALL BE CONSTRUCTED SO THAT WATER WILL NOT ACCUMULATE ON WALKING SURFACES.
5. LANDINGS WILL PROVIDE A LEVEL AREA (MAX. 5% GRADE OR CROSS SLOPE) AT APPROXIMATE STREET ELEVATION. A 4 FOOT SQUARE LEVEL LANDING IS THE REQUIRED MINIMUM.
6. LANDINGS WILL PROVIDE A LEVEL AREA (MAX. 2% GRADE OR CROSS SLOPE) AT APPROXIMATE STREET ELEVATION. A 4 FOOT SQUARE LEVEL LANDING IS THE REQUIRED MINIMUM.

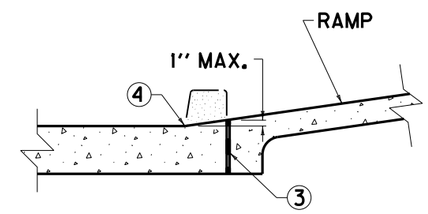

DROP CURB FOR RAMP

KENTUCKY
DEPARTMENT OF HIGHWAYS

SIDEWALK RAMPS

SUBMITTED William S. Haskins 11-21-14 DATE

029

FILE NAME: G:\USERS\JEFF.LAIL\DESKTOP\ADA SIDEWALK RAMPS.DGN
USER: jeff.lail
DATE PLOTTED: June 18, 2014
E-SHEET NAME:
MicroStation v8.11.7.443

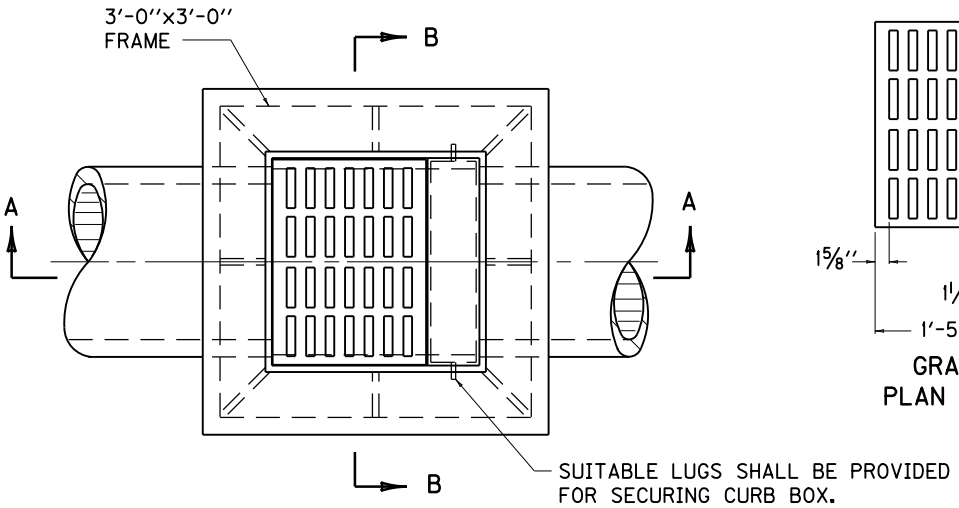

PLAN VIEW

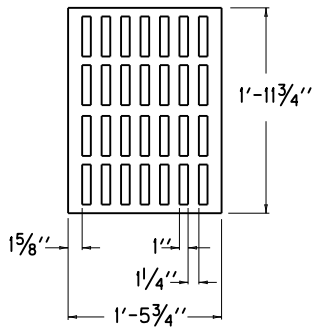

GRATE
PLAN VIEW

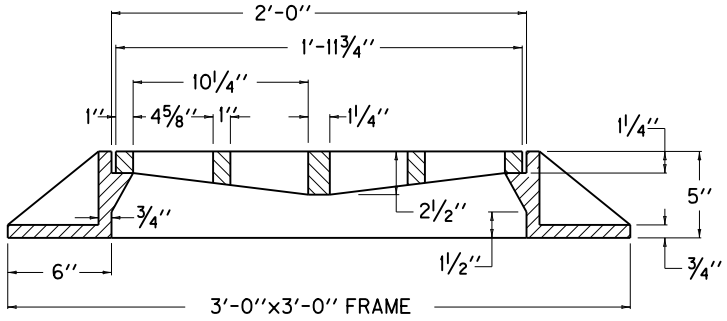

DETAIL OF FRAME & GRATE
AT SECTION A-A

APPROXIMATE QUANTITIES

PIPE SIZE	MIN. HEIGHT	CU. YDS. CONC.
15"	4'-0"	1.15
18"	4'-3"	1.22
CURB FRAME WEIGHT = 61 LBS.		
FRAME WEIGHT = 277 LBS.		
GRATE WEIGHT = 127 LBS.		

NO DEDUCTIONS HAVE BEEN MADE FOR PIPE.

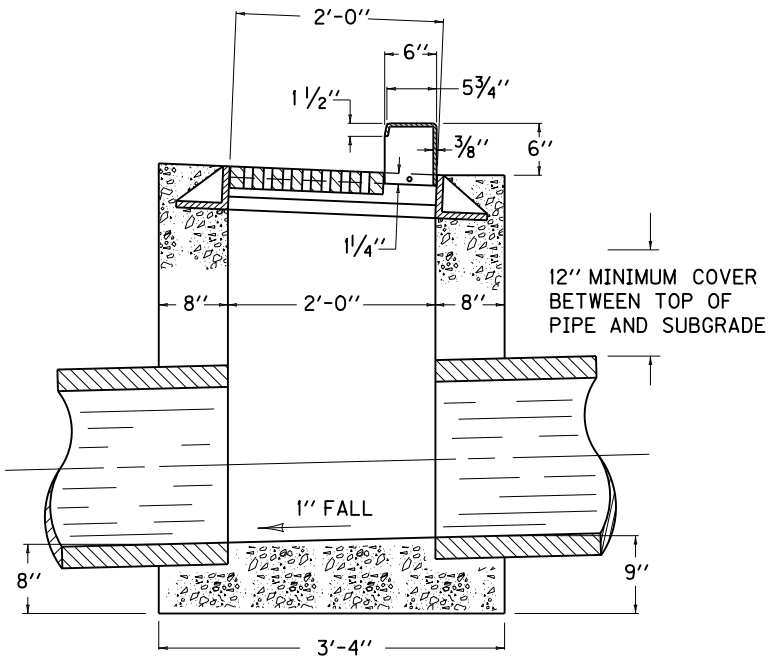

SECTION A-A

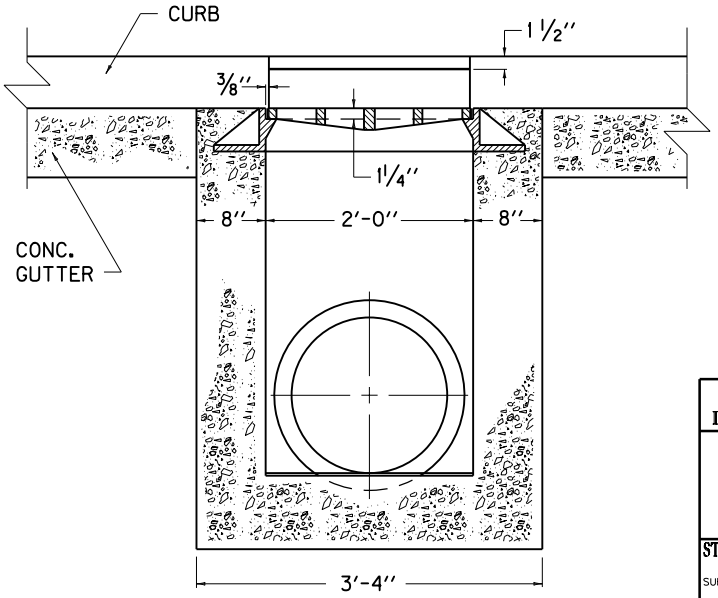

SECTION B-B

KENTUCKY
DEPARTMENT OF HIGHWAYS

STANDARD CURB
BOX INLET
TYPE F

STANDARD DRAWING NO. RDB-320-05

SUBMITTED John B. Scholtens — DIRECTOR DIVISION OF DESIGN — 12-1-99 DATE

APPROVED J. M. Yowell — STATE HIGHWAY ENGINEER — 12-1-99 DATE

EXHIBIT 700-06

TYPICAL SECTIONS

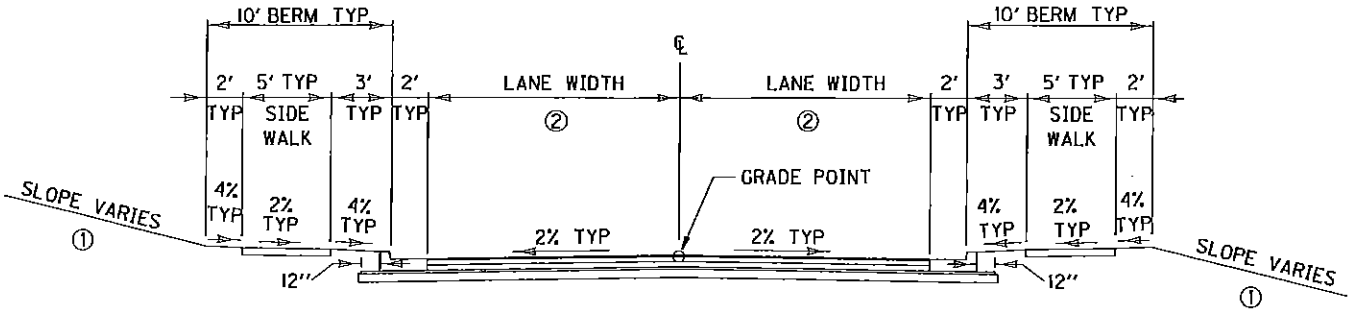

NORMAL SECTION

CURB AND GUTTER
URBAN TWO-LANE

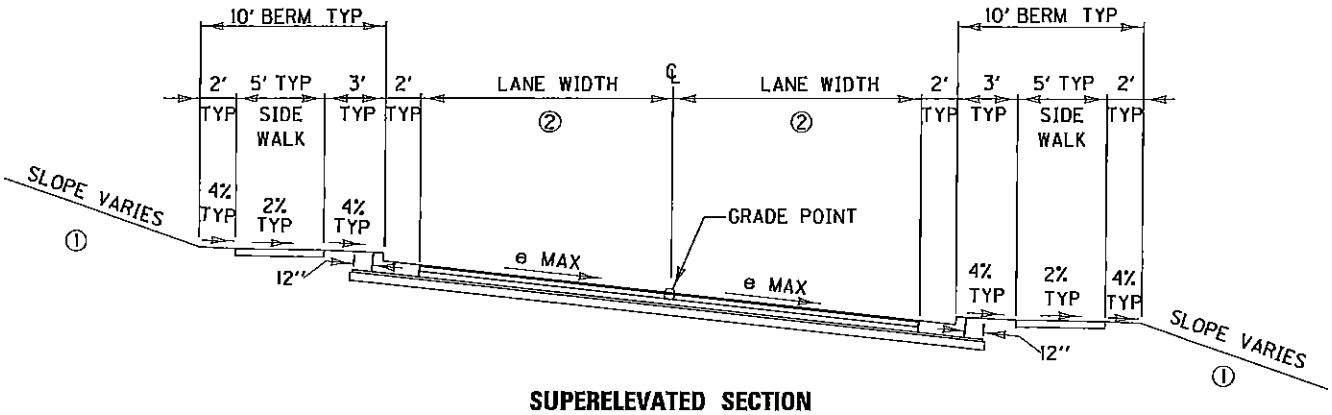

SUPERELEVATED SECTION

URBAN TWO-LANE
CURB AND GUTTER

① REFER TO AASHTO'S "ROADSIDE DESIGN GUIDE", CURRENT EDITION, FOR SPECIFIC SLOPE GUIDELINES.

② REFER TO AASHTO'S "A POLICY ON GEOMETRIC DESIGN OF HIGHWAY AND STREETS", CURRENT EDITION, FOR SUGGESTED LANE WIDTHS OF THE VARIOUS ROADWAY CLASSIFICATIONS. FOR ROADWAYS WITH ADT < 400, REFER TO AASHTO'S "GEOMETRIC DESIGN GUIDELINES FOR VERY LOW-VOLUME LOCAL ROADS".

DRAWING NOT TO SCALE

3-25-2004

APPENDIX D:

STORM WATER DRAINAGE SYSTEM

CITY OF BEREA, KENTUCKY

STORM WATER DRAINAGE SYSTEMS

General

Specifications given hereinafter outline the minimum standards for design, materials, installation methods, and inspection procedures required by the City of Berea regulations and the construction of storm drainage facilities. Design of storm drainage facilities shall be based on Kentucky Department of Highways Manual of Instructions for Drainage Design except hereinafter modified.

Scope

The scope of these specifications is set forth the policies of the City of Berea Subdivision Regulations regarding design and construction of storm drainage facilities. Design of the facilities covered herein must be performed by and carry the seal and signature of a qualified Professional Engineer or must be Performed by and carry the seal of a Licensed Landscape Architect, licensed in the Commonwealth of Kentucky.

Design Criteria

1. **Post-development vs Pre-development Design Criteria**

   A. **Peak Discharge Consideration -** The basic standard for design of drainage systems will be to keep runoff characteristics after development as close as possible to the same level as existed prior to any development. To achieve this objective, storm water detention retention facilities will be required in most cases so that the peak discharge measured in cubic feet per second (cfs) from the developed area shall not be greater than the peak discharge from the pre-developed as identified below. The peak discharge shall be evaluated for three separate SCS typ-2 storm events. Using an approved storm water modeling procedure and approach (rational method, TR-55, etc) the 2year/1 hour storm, the 10-year/24 hour storm, and 100-year/1 hour storm shall be evaluated. The peak discharge for the pre-developed site shall be measured as an instantaneous flow rate taking into consideration both the detained storm water and any undetained storm water.

   B. **Downstream Flood Levels -** the developer shall provide storm drainage improvements that will prevent the downstream flood level from being raised in a 2-year/1 hour storm, a 10-year/24 hour storm, and the 100-year/1 hour storm considering both the instantaneous flow rate and flood elevations caused by the increased quantity of storm water from the development. Where conditions and engineering calculations indicate benefit from storm

water detention/retention facilities would not occur, they may be deleted from the development requirements in favor of channel improvements into or out of the site to improve flow if approved by the City of Berea. Calculations and analysis must be completed, submitted, and approved prior to this exception being granted.

C. **Watershed over-compensation -** There shall be no over-compensation within one watershed to allow for under-compensated storm water detention in any other watershed. Each watershed must be evaluated separately, and each watershed must meet the requirements as stipulated within the specifications.

D. **Discharge Points-** The discharge of the storm drainage facilities shall be into either a natural, well defined drainage path or into a man made drainage way. For areas proposed to drain onto adjoining properties essentially undetained, then the drainage must be sheet flow. Point discharges onto adjoining property and public right of ways are prohibited unless the discharge point is into the actual, well defined path or into a man made drainage way. Receiving channel capaCity must be confirmed as adequate to convey at least the 5-year/1 hour storm discharge.

E. **Connection to public system requirements -** Where an adequate public storm sewer system is available to the site boundary, the developer shall construct the drainage system to connect with such storm sewer system. If such a system is not available, the developer may be required to provide for the construction of necessary storm drainage facilities as may be required beyond the immediate boundaries of this subdivision in order to conduct runoff to an acceptable point of disposal.

Storm Water Collection System Design Criteria

1. **General System Design** - The preliminary storm drainage layout shall be submitted along with a preliminary arrangement of the development. This layout shall indicate the overall drainage scheme in enough detail to ensure the proposed plan is acceptable and understandable. The City of Berea shall review this preliminary plan and issue a statement indicating a general acceptance or denial of this preliminary plan. If the developer is proposing a dedicated detention or retention basin to the City of Berea for acceptance and maintenance, then this request must be made in writing and approved by the City of Berea prior to the preliminary storm water plan being generally accepted. After general acceptance by the City of Berea of the preliminary storm water drainage layout, the developers engineer may proceed with a final design of the storm drainage system. An overall drainage plan shall be prepared and furnished as part of the construction plans. This overall drainage plan shall include the pre-developed and post-developed contours and other information as may be necessary to establish that positive drainage for all the lots throughout the subdivision shall be satisfactorily accomplished. Easements for the storm drainage system shall be shown on the plats, as applicable, in the locations and widths as approved by the City. Special notes pertaining to the maintenance of detention and retention basins may be required on the plats, as applicable. Release or modification to existing drainage easements shall require the written approval for the City. Engineering reviews shall be made by City Engineering Firms to determine the adherence to the criteria as outlined in the specifications and to determine compliance with other City County specifications. After the review of the preliminary submittal, an appropriate

number of sets of the final storm drainage system shall be submitted to the City of Berea. These plans shall include the original seal and signature of a professional engineer, and the engineer's calculations for runoff, catch basin spacing, pipe sizing, gutter spread, and detention volumes. The City of Berea reserves the right to reject any plan that would adversely affect adjoining or downstream properties.

A. **Curb inlets or catch basins -** Curb inlets or catch basins shall be placed at all depressions in such a manner as to prevent storm water from crossing the pavement and at other locations along the curb as necessary to limit the spreading of water onto the pavement to ½ the driving lane with a 5-year/1-hour storm. Curb inlets shall be Lexington Fayette Urban County Government Type A, Type B, and Type C or Kentucky Department of Transportation Type A, and Type B Inlets. LFUCG Type D, cast iron inlets may be used as auxiliary devices but may not be used as primary inlets. Storm water shall not be designed to cross over pavement.

B. **Piping System -** Design of storm water piping systems shall be based on the Kentucky Department of Transportation Manual of Instructions for Drainage Design (except as hereinafter modified). Storm water pipes shall be designed on the basis of a 10-year storm event and using a minimum time of concentration (TC) of eight minutes. The unit shall then be checked for backwater conditions with a return of 100-year return frequency. No structure flooding shall be induced by the structure at the 100-year return frequency. The Manning's roughness coefficient to be used in culvert design shall be 0.024 for aluminized metal pipe (AMP may not be used under roadways or within the roadway public right of way) and .012 for reinforced concrete pipe (RCP), smooth interior high-density polyethylene (HDP), ductile iron pipe (DI) and polyvinyl chloride pipe (PVC). A plan and profile of the proposed storm drainage system including pipes, drainage swales, stream relocations, etc. shall be drawn with pipe sizes, types, grades and inverts indicated. All drainage pipes must be extended to a natural, well-defined drainage path or to within 5' fo the rural property line and connected to a man made drainage way. Under no circumstances shall the storm water drainage system be designed, constructed or constructed or connected so that the flow is diverted into any public or private sanitary system. Minimum pipe size is 12" for storm sewers.

C. **Storm Manholes-** The storm drainage system shall be designed and constructed with sufficient junction boxes, manholes, and other appurtenances to provide ready access into any section for clean out and maintenance operations. Storm sewer manholes with improved inverts shall be required for pipes smaller than 60" in diameter at any change in direction or junction point and when distances between storm holes exceeds the 400'.

D. **Box Culverts -** Any drainage plan requiring the construction of box culverts shall include reinforced concrete designs from a professional structural engineer to withstand the anticipated loading.

E. **Drainage Swales -** When open channel flow in drainage swales is proposed as a method of storm water transport (natural drainage swales, man-made drainage swales,or drainage pipes), the developer shall provide drainage swales sufficient in size to contain the peak runoff from the 25-year frequencies storm. The swales shall then be checked using the 100-year frequency storm. No structure flooding shall be induced by the swales at the 100-year return frequency.

Channel lining for swales shall be based on the allowable shear stress in accordance with Kentucky Department of Transportation criteria. Riprap shall not be permitted. The remaining bottom portions of the swales containing a low flow channel shall be sloped a minimum of 2% toward the channel. Paved bottoms may be required in swales with slopes less than 2%. The side slopes fro swales shall not be steeper than 2 to 1. The side slopes for all other swales shall not be steeper than 3 to 1.

F. **Headwalls -** Head walls are required for any pipe within the proposed storm drainage system. Headwalls are also required for any existing pipe within the proposed subdivision. Headwalls pipes and of a configuration to prevent erosion and to reduce the veloCity. Minimum 3' high chain link fencing shall be required along the perimeter of the headwall if the distance from the pipe invert to the top of the head wall exceeds 3.5'. The fence shall consist of galvanized number 9-gauge wire with 2 ½ " diameter core posts. All headwalls designed shall have prior approval of the City of Berea.

G. **Existing Structures -** The storm drainage system shall take into account adjoining subdivision and drainage areas to ensure that the effects of existing structures and or drainage ways have been considered. If existing structures are to be utilized within the storm drainage system, then each existing structure shall meet the design requirements as set forth in the specifications. Additionally, the existing structure shall meet the materials and construction requirements as set forth in the specifications.

H. **Sinkholes -** Sinkholes, either active or inactive, shall not be used for the storage or transfer of storm water. Sinkholes shall not be considered as a viable part of the storm drainage system. No structure shall be allowed beneath the sinkholes over topping elevation.

I. **Springs -** Springs, either constantly flowing or wet weather flowing, shall be considered within the storm drainage system Spring boxes and piping shall be required to divert the ground water from the spring to the public system. This shall include existing springs and any spring discovered during construction. Under no circumstances shall a spring be designed, constructed, or connected so that the flow is diverted into any public or private sanitary sewer system.

J. **Private Systems** - A private storm drainage system shall be defined as a system installed by an individual (i.e. person or company) to fulfill drainage requirements not associated with systems, nor accepted by the City of Berea. The system shall follow the same drainage criteria as outlined in the specifications.

2. Detention and Retention Basin Design Criteria

A. **Detention Basins -** A detention basin shall be defined as a normally dry, storm water storage area with a principal spillway and an emergency spill way. Grass bottoms in detention basins shall be designed with minimum slopes of 2%. Basins with slopes less than 2% shall include low flow concrete channels designed with minimum slopes of 0.5% from the basin inlets to the outlets. The concrete channels shall have a minimum 6" depth with side slopes not to exceed 2

to 1 and shall be constructed in accordance with standards outlined by the Kentucky Department of Highways. The bottoms and sides of detention basins shall be sodded. In certain instances, other techniques (underground vault storage) may be considered for private systems on a case-by-case basis, after it has been proven with engineering calculation that traditional detention designs are not feasible. Detention basins shall be excavated and the principle spillways constructed prior to the construction of the water facilities, streets, and other storm drainage facilities. If basins are to be used as sediment basins, then the basin must be maintained on a regular and ongoing basis and all accumulated sediment must be removed prior to final vegetation. Additionally, final plats shall stipulate that only the City of Berea may make changes or modifications to the drainage and detention facilities. If the detention basin is used as a sediment basin, accumulated silt shall be removed prior to final revegetation.

B. **Retention Basins -** A retention basin shall be defined as a storm water storage area that permanently stores a predetermined pool of water. Retention basins shall be designed with drainage areas of sufficient size to ensure that the standing water will not stagnate or present health hazards. For the design of retention basins the static ground water level must be taken into consideration for any and all utilities and the existence or possibilities of nearby basements. The minimum depth for retention basin shall be 3' as measured from the invert of the principle spillway to the invert of the emergency spillway. The storm water piping system used to feed the retention basin shall have the inflow inverts above the normal lake level as dictated by the invert elevation of the principal spillway. Trash racks and rock silt check dams shall be designed at each inflow source to the retention basin to prevent silt and or trash from entering into the permanent pool.

C. **Construction in Flood Plain -** Detention and retention basins shall not be constructed within the 100-year flood plain as defined by the flood insurance rate maps for theCity of Berea unless a permit for such construction is obtained from the Division of Water in Frankfort, Kentucky. In the absence of any such map, the engineer will be required to complete sufficient studies so as to determine the 100-year flood plain.

D. **Principle Spillway -** Each detention or retention basin is required to have a principal spillway of a size dictated by the overall storm water detention/retention plan. The minimum size for principal spillways shall be 4" in diameter for either pipe or orifice. More than one principle spillway for each detention or retention basin may be required to ensure compliance with the method as outlined in the specifications. Gabion baskets will not be used as spillways.

E. **Emergency Spillway -** Each detention or retention basin must have an emergency spillway of sufficient size to discharge the 100-year/24 hour storm event discharge through the emergency spillway. Gabion baskets will not be used as spillways.

F. **Embankment Requirements -** If an earthen berm is used to construct a detention or retention basin, the minimum top width shall be 4', and the maximum slope of the embankment shall be three horizontal for each foot vertical rise. The embankment shall be constructed to a minimum 1' above the crest of the 100-year/24 hour storm event discharge through the emergency spillway.

G. **Materials -** All materials, construction methods, and methods of measurement shall conform to the latest edition of the Kentucky Department of Highways Bridge and Highways Specification Manual. Appropriate Kentucky Department of Transportation or Lexington Fayette Urban County Government standard drawings shall be included with all plans.

H. **Erosion and Sediment Control Plan -** A complete and comprehensive erosion control plan (ECP) shall be prepared for each and every development submitted to the City of Berea. This erosion control plan shall be based on the criteria listed in the latest edition of the Manual of Best Management Practices for Construction Activities, prepared by the Kentucky Division of Conservation and the Division of Water, Natural Resources and Environmental Protection. Erosion and sedimentation controls must be in place prior to the start of construction. The City of Berea reserves the right to inspect erosion and sediment controls and to order and require corrective action if the erosion and sediment controls do not meet approval. Plats and/or plans shall stipulate maintenance responsibilities for the erosion and sediment controls. This plan will contain at the very minimum:

A. A discussing of the land-disturbing project including the purposes, location and size of area to be disturbed.
B. A discussion of the topography, land cover condition, soils, percent of impervious area and drainage patterns both before and after development.
C. An identification of land use and cover conditions on adjacent property
D. The beginning and completion dates of construction activities
E. A discussion of construction sequencing, including clearing, grading, and revegetation activities as well as winter shut downs.
F. A listing of erosion and sediment control BMP's, along with location, installation schedule and the logic for each
G. A listing of storm water pollution control and groundwater protection BMP's to minimize pollution during construction (other than erosion) that might result from construction activities
H. Current topography from field surveys or aerial photography showing pre-construction topography, drainage ways, property lines, utilities, limits of construction, and trees to be preserved
I. Finished grades, building locations, paved areas, construction entrances, access or haul roads, stock pile areas, and equipment storage areas
J. All planned BMP's overlaid on the other features
K. Areas that are not to be disturbed
L. All hydrologic, hydraulic, structural and geotechnical calculations
M. An operation and maintenance (O & M) plan which provides a schedule for inspection, maintenance and repair of BMP's during construction activities. A maintenance schedule shall also be provided to ensure that permanent measures such as vegetation are properly established after construction is complete
N. The name, address, and telephone number of the parties responsible for implementing the plan as well as the name for the construction supervisor who will be on-site at all times during construction

Approvals - This section provides information related to the various approvals required prior to start of

construction and prior to acceptance of the completed project.

1. **Planning Commission Approval -** An appropriate number of construction plans including storm drainage plans shall be submitted to the Planning Commission staff office for review and approval. The Planning Commission's review will be to verify that the project complies with the requirements of subdivision regulations and general specifications. After the review an appropriate number of sets of plans shall be submitted for written approval. At least one set shall contain the original seal and signature of a registered professional engineer on each sheet. Construction shall not begin until the Planning Commission has issued a written approval of the plans. Upon completion of the construction the developer shall make a written request to the City of Berea for acceptance of the public facilities.

2. **Changes -** The developers and/or property owner may make minor changes to the approved construction plans if written notification of the change is given to the Codes Administrator if changes meet the requirements of the City's subdivision regulations and general specifications, and if the changes do not violate any City, county, state or federal regulation. Any changes from the approved plans that are not in compliance with the regulations must be approved by the Planning Commission prior to making the proposed changes.

3. **NPDES Notice of Intent** - When applicable to the size of the development, a copy of an approved NPDES-Notice of Intent Permit must be filed with the City of Berea before approval for construction is granted.

See Appendix "G"

APPENDIX E

GRADING AND FILL ORDINANCE

GRADING AND FILL ORDINANCE

PURPOSE

Grading, filling, excavating and other earthwork activities frequently cause damage to existing land features and create problems and conflicts with future public works construction and other related construction activities such as subdivisions, and commercial developments. These earthwork activities frequently result in uncompacted fills and significantly altered contours, which adversely affect all of the citizens of Berea.

The intent of this document is to safeguard the public, protect the natural resources and environment within the boundaries of our City and to prevent conflicts with future developments and constructions. This will be accomplished by regulating clearing, earthwork, excavation, filling and other land disturbing activities, reducing soil erosion, and providing procedures for submission, review and approval of fill site plans and erosion control plans prior to soil disturbance. A standardized permitting process will be developed and detailed.

At all times the permittee is expected to use and exercise reasonable, rational and logical judgment in the filling process so as not to jeopardize the safety of the public, the quality of his site or the integrity of the environment.

DEFINITIONS

Earth Material - Soil, topsoil, clay, sand, or gravel. Rocks, stones, bricks concrete slabs no more than twelve (12) inches in size in any direction may be defined as Earth material. Material of this size may NOT be placed within the top twenty-four(24) inches of a fill area.

Erosion - The process by which the ground surface is worn away by the action of wind or water.

Excavation - Removal of material from a site via any method.

Filling - The process of depositing fill material on a site to replace or supplement the existing material.

Fill Material - Acceptable earth material that is not organic in nature. Fill material shall be capable of being compacted to the standards as noted elsewhere in this document. Furniture, automobiles and other mechanical devices, wood chips, cinders, ashes, trees, tree stumps and other vegetative material are NOT acceptable fill material.

Grading - Any stripping, excavation, filling, stockpiling of soil or any combination thereof used to alter or change existing contours

PERMIT REQUIRED, EXCEPTIONS AND COMPACTION

A permit is required for the following fill activities:

1. A permit shall be required for any activity that involves fill materials as defined in this document and is being brought into a property from an off-site location.

A permit is not required for the following fill activities:

1. When the total amount of fill to be brought onto, a property is less than one hundred (100) cubic yards.

2. When the fill material is to be brought onto a site is for a public improvement project or a utility improvement project, which has been authorized by the City of Berea, the Commonwealth of Kentucky or the United States Government.

3. The construction of a single or two family dwelling unit for which a building permit has bas been issued.

Compaction of the fill material shall be required in the following situations:

1. Compaction shall be required on each and every site NOT zoned Agricultural. Sites in Agricultural zoned areas will be considered on a case-by-case basis. Fill material shall be compacted in no greater than one (1) foot layers to a minimum density of 95% of maximum density as defined by the current ASTM or KDT standard. The compaction process and final configuration shall be monitored and certified by a Licensed Professional Geotechnical Engineer licensed in the Commonwealth of Kentucky.

REQUIREMENTS FOR FILL PERMIT

A fill permit application shall include the following:

1. The name, address, contact phone number and signature of the property owner as well as the name, address, contact phone number and signature of the person doing the filling operation. The person doing the fill operation must have and maintain a 24-hour contact number.

2. The name, address, parcel number and related deed information of the property where the fill operation will take place.

3. The name, address and phone number of the Licensed Geotechnical Engineering who will be doing the compaction monitoring, fill testing and ultimate site compaction certification.

4. The nature and purpose of the proposed fill operation.

5. The type of fill material to be brought and placed on the site as well as the type of material to be brought and placed on the site.

6. A detailed description and schedule of the filling process to include the proposed method of compaction and a beginning and ending date.

7. The proposed transportation route for the fill material.

8. A drawing/plan of the site which shall contain:

   A. North arrow.

   B. The dimensions of the lot and acreage.

   C. Dimensions of the area to be filled and proposed phasing and method of stabilization for each phase.

   D. Adjoining property addresses and names of owners.

   E. The location of all roads bordering or on the property.

   F. The location of all utilities on the property.

   G. The location of all easements on the property.

   H. Any and all natural features.

   I. Existing 2' contours of the property shown with dashed lines. Contours must extend a minimum of 50' past subject property lines.

   J. Proposed 2' contours of the property shown with solid lines. Contours must extend a minimum of 50' past subject property lines.

   K. The location, size and use of any structures on the property.

   L. Calculated fill volumes based on existing and proposed contours. Cross sections may be required.

   M. Drainage calculations.

   N. A detailed soil erosion control and" water quality protection plan which includes but is not limited to:

      i. Silt fence

ii. Seeding/straw/mulch erosion controls.

iii. Temporary and final/permanent seeding schedule

iv. Check dams

v. Silt control ponds

vi. Any and all other necessary Best Management Processes

Any requested fill permit with a site within proximity to a stream, creek or any other waterway may be subject to additional and extensive requirements due to possible State Government and Federal Government requirements. It is the permittees responsibility to determine and gain any additional approvals that may be required.

APPROVALS, TIME FRAME AND APPEAL PROCESS

Within 30 days from the date the requested fill permit was logged in to the Codes Administration office, the Codes Administrator or the City Engineer will determine if the requested permit may be approved by City of Berea Staff, or approved by the Berea Planning Commission and/or if a public hearing will be necessary. The following guidelines will govern the approval process:

A. If the intended fill area contains less than 250 cubic yards of fill material or if the intended fill area is less than 10,000 square feet, the fill permit may be approved by City of Berea Staff. However, it is still within the discretion of the staff to take this request to the planning commission. This actual decision will be made within 60 days from the date the request is logged in to the Codes Administration Office. Decisions made by City of Berea Staff may be appealed to the Planning Commission.

B. If the intended fill area contains more than 250 cubic yards of fill material or if the intended fill area is greater than 10,000 square feet, the fill permit must be approved by Berea Planning Commission. The Planning Commission will decide on a case-by-case basis whether to require a public hearing. If no public hearing is required, the final decision will be rendered within 60 days from the date the request was logged in to the Codes Administration Office. Approvals that require a public hearing may require up to 120 days after the date the request was logged into the Codes Administration Office, however, additional time may be required due to the legal requirements to conduct a public hearing. Decisions made by the Berea Planning Commission may be appealed to the Madison County Circuit Court.

Any requested fill permit with a site within proximity to a stream, creek or any other waterway may be subject to additional and extensive time due to possible State Government and Federal Government requirements. It is the permittees responsibility to determine what additional approvals may be required.

PUBLIC NOTICE REQUIREMENTS

In every case regardless of the approval process, it will -be the permittees responsibility to notify the public of their intention to fill on the proposed site via:

A. A sign posted on the site that is legible from the closest street stating the owners name, the site address, a contact number as well as a proposed schedule for the filling process.

B. A legal notice in the local newspaper at least 30 days prior to the start of the filling process. A copy of the notice must be submitted before final approval of the permit.

C. Certified letters sent to each adjoining property owner and any property owners within a 500-foot radius of any street or road contiguous to the fill site. Copies of the mail receipts must be submitted before final approval of the permit.

AS-BUILT DRAWINGS AND SITE CERTIFICATION

Upon completion of the fill process and within 30 days of the intended competition date as stated in the original fill application the permittee must submit:

A. Certified as built drawings, stamped and signed by the Geotechnical Engineering as designated in the original fill application. The as built drawings shall contain but are not limited final contours, any and all drainage structures with invert and flow line elevations, any other relocated or added public utility facilities, roadways and/or entrances, structures of any type or size.

B. A site certification letter signed and stamped by the Licensed Geotechnical Engineering who did the compaction monitoring and fill testing The Certification Letter will contain statements by the Geotechnical Engineer that he monitored the fill site and fill process, tested the material on an ongoing basis, and that the final compaction meets required standards. Copies of all test results and dates of his site visits and/or his project diary must also be submitted.

The Codes Administrator or the City Engineer shall respond within 30 days of the receipt of the above documents with a decision or a recommendation for a decision to the Planning Commission.

APPENDIX F:

PROCESSING A ZONE CHANGE REQUEST

A. Zone Change Request must be submitted at least 21 days prior to the Public Hearing. The application is to be filed out entirely by the applicant. Some assistance may be needed from the Codes Office determining the adjacent zoning. All adjacent property owners and their mailing addresses must be included on the form. A copy of the justification or findings that warrant a zone change must be supplied to the applicant, and the Comprehensive Plan Future Land Use Map must be checked to see if the requested zoning designation is in compliance with the map. A copy of the deed and/or a legal description must be supplied by the owner.

Once the application and all of the information has been supplied, and the fee has been submitted to the Codes Office:

1. A Public Notice is to be placed in the newspaper at least 14-days prior to the Public Hearing. This notice must include a map showing the area of the zone change request. Once the Public Notice has been published, a copy of the notice in the paper must be attached to a "Certification of Public Notice" and submitted to the City Clerk for their signature. A copy of the Certification is to be placed in the Planning Commission folder for that meeting and a copy goes in the file for the zone change request.

2. Certified letters are to be sent via US mail to the adjacent property owners at least 14-days prior to the meeting.

3. Signs must be placed on the property at least 14-days prior to the meeting with the date and time of the hearing, the current zoning, and the requested zone.

4. After the Public Hearing, and after the minutes have been approved by the Commission, copies of the application, Certification of Public Notice, deed and/or legal description, and approved minutes are to be mailed to Corporation Counsel. Corporation Counsel will prepare the Facts and Findings of the Planning Commission and the Ordinance. The Facts and Findings will be sent to the Codes Office for the Planning Commission Chairperson. After the Facts and Findings are signed, retain a copy to be included in the Commission's minutes for the meeting, and in the zone change request folder. Return the original to the City Clerk. The Ordinance will be read at two City Council meetings, and will be voted on at the second meeting.

5. File the folder in the Zone Change file.

ZONE CHANGE APPLICATION
City OF BEREA

Owner's Name _____

Owner's Address _____

Telephone _____ **Date** _____

***Zone Change Request Location** _____

Present Zone _____ **Present Use** _ _____

Proposed Zone _____ **Proposed Use** _____

Attorney _____ **Address** _____

Adjacent Property Zone and Use: North _____

South _____ **East** _____ **West** _____

City Services Status:	**Exists**	**Will Provide**
Sewers	_____	_____
Refuse	_____	_____
Water	_____	_____
Electric	_____	_____
Gas	_____	_____
Fire, Police	_____	_____
Storm Sewers	_____	_____

JUSTIFICATION FOR ZONE CHANGE: (Check KRS 100.211, 100.213)

_____

_____

_____

_____

OTHER INFORMATION:

_____

_____

LEGAL DESCRIPTION OF PROPERTY: (May be attached to this application)

_____

_____

_____

_____

_____

_____

LIST ALL ADJOINING PROPERTY OWNERS AND ADDRESSES (You the applicant are responsible for the correct names, and complete addresses.)

_____

_____

_____

_____

_____

I do hereby certify, to the best of my knowledge and belief, all application materials are herewith submitted, and the information they contain is true and correct. I further certify I am the owner or holder of an agreement to purchase this property.

Signature _____ Date _____

Fee - $500.00 Date Paid _____ Received By _____

APPENDIX G:

PROCESS FOR APPLYING FOR A CONDITIONAL USE PERMIT OR VARIANCE REQUEST

A Conditional Use Permit or a Variance must be applied for by the owner. If a person other than the owner wishes to request a Conditional Use Permit or Variance Request, the owner must sign the application and write a letter to the Board of Zoning Adjustments stating that the applicant has the authority to represent the owner at the Board of Zoning Adjustments Meeting, if they cannot be present, they are aware of the request, and are in agreement with the request.

1. The Address of the requested Conditional Use Permit or Variance

_____

2. Owner Information: Name _____

Address _____

Telephone ( )_____**or ( )**_____

3. Applicant Information: Name _____

Address _____

Telephone ( ) _____ **or ( )** _____

- **Attach: Please attach a list of all Adjacent Property Owners and their mailing addresses. This includes the properties on each side, at the rear, and the front, which includes the properties across the street.**
- **Attach: A copy of the deed for the property.**
- **Attach: A written statement outlining what is being proposed including the Code Section pertinent to your request, and any other information or visual exhibit that might be relevant to this request.**
- **The owner must sign the application on the Applicant line with the name of the Company, if applicable, printed below.**
- **Do not fill out the application. That will be done in the Codes Office.**
- **Fee of $200.**

1) If you are applying for a variance, please include a drawing showing the building located on the lot showing how far the proposed building will be from the lot line for the requested variance.

2) Applications are due the first Wednesday of the month to be placed on the agenda for the Board of Adjustments Meeting held on the 4th Wednesday of the month.

G-2

APPEAL NO

BLDG PERMIT NO

NOTICE OF APPEAL

The undersigned hereby appeals to the Board of Zoning Adjustment for authorization of a (Building Permit) (Certificate of Occupancy) for the property located at:_____

_____

Sec. A Appeal from INTERPRETATION of Ordinance by Building Inspector.

Describe provisions of the Zoning Ordinance in question_____

_____

Describe decision of Building Inspector _____

_____

_____

Sec. B Request for SPECIAL EXCEPTION

Describe provision of Zoning Ordinance requiring written approval of Board of Adjustment in this case_____

_____

_____

Describe Proposed Use. (Draw a plot plan on back of this sheet if required)_____

_____

_____

Sec. C Appeal for a VARIANCE

Describe the provision of the Zoning Ordinance from which you seek a Variance_____

_____

_____

Was this a lot of record at the time zoning was adopted? _____

Describe the unusual situation of property causing unnecessary hardship which justified variance from terms of the Ordinance_____

_____

_____

Applicant

_____

Transmitted by: Received

by:_____

_____

Building Inspector Date Secretary, Board of Adjustment

PUBLIC HEARING DATE ADVERTISED HEARING DATE

NOTICE MAILED TO:

G-3

APPEAL NO.

BLDG. PERMIT NO.

DECISION OF BOARD OF ZONING ADJUSTMENT

With regard to authorization of a (Building Permit) (Certificate of Occupancy) for property located at

_____

Applicant _____ Address_____

Sec. A INTERPRETATION ---- In accordance with Section ____ the Board adopted the following statement of Interpretation of the Zoning Ordinance:

_____

_____

_____

Sec. B SPECIAL EXCEPTION — In accordance with Section ____ the Board reviewed the request for Special Exception under the terms of Section _____ of the Zoning Ordinance. The request is _____Granted

_____Denied

_____Granted subject to conditions

Explanation of (denial) (conditions):

_____

_____

_____

Sec. C VARIANCE – In accordance with Section _____ the Board reviewed the appeal for a Variance to the requirements of Section _____ of the Zoning Ordinance. The Board applied the following criteria:

1. Strict application of the ordinance would produce an undue hardship, other than financial.
2. The above hardship is unique and would not be shared by many other properties in the surrounding area and in the same zoning district.
3. The variance would not change the character of the area and would preserve the purpose and intent of the ordinance.

It was determined that all three of the above conditions (were) (were not) present, therefore the appeal is

_____Granted

_____Denied

_____Granted, Subject to Conditions

Explanation of (denial) (conditions):

_____

_____

_____

Date_____ Signed _____

Secretary, Board of Zoning Adjustment

Copies to: Applicant _____ Building Inspector_____

APPENDIX H:

H-1 APPLICATION FOR LAND SUBDIVISION & DEVELOPMENT

H-2 CODES STAFF DEVELOPMENT PLAN REVIEW CHECKLIST

H-3 LAND SURVEYOR'S DEVELOPMENT PLAN CHECKLIST

H-4 CITY ENGINEER'S DEVELOPMENT PLAN CHECKLIST

H-5 BEREA MUNICIPAL UTILITIES DEVELOPMENT PLAN CHECKLIST

H-6 DEVELOPMENT PLAN CERTIFICATES

H-7 LAND SURVEYOR'S PRELIMINARY PLAT CHECKLIST AND CERTIFICATES

H-8 LAND SURVEYOR'S FINAL PLAT/ MAJOR PLAT CHECKLIST AND CERTIFICATES

H-9 LAND SURVEYOR'S PLANNED UNIT DEVELOPMENT CHECKLIST AND CERTIFICATES

H-10 LAND SURVEYOR'S FINAL PLAT/ MINOR PLAT CHECKLIST AND CERTIFICATES

H-11 CERTIFIED AS-BUILT CHECKLIST

H-1

City OF BEREA
APPLICATION FOR
LAND SUBDIVISION & DEVELOPMENT

DATE: _____

TYPE OF SUBMISSION: [ ] MAJOR PLAT [ ] FINAL PLAT
[ ] MINOR PLAT [ ] DEVELOPMENT PLAN
[ ]PRELIMINARY PLAT

1.) NAME OF PROPOSED DEVELOPMENT
2.) LOCATION OF DEVELOPMENT
3.) NAME OF APPLICANT
ADDRESS_____ EMAIL_____
CITY_____STATE_____ ZIP_____
PHONE NUMBER: BUSINESS _____CELL _____

4.) OWNER OF LAND
ADDRESS _____ EMAIL_____
CITY_____STATE_____ ZIP_____
PHONE NUMBER: BUSINESS_____CELL _____

5.) NAME OF SURVEYOR
ADDRESS _____ EMAIL_____
CITY_____STATE_____ ZIP_____
PHONE NUMBER: BUSINESS_____CELL_____

6.) NAME OF ENGINEER
ADDRESS _____ EMAIL_____
CITY_____STATE_____ ZIP_____
PHONE NUMBER: HOME_____BUSINESS _____

7.) FEE $ _____(SEE ATTACHED FOR AMOUNT)

8.) DIGITAL SUBMITTAL (PLEASE ATTACH WITH APPLICATION)

9.) PROPOSED USE

_____

10.) PURPOSE OF THE PLAT

_____

11) ZONE _____NUMBER OF LOTS ____AREA OF TRACT

12) DO YOU PROPOSE DEED RESTRICTIONS? YES [ ] NO [ ]
(IF YES, PLEASE ATTACH A COPY)

13.) STATE YOUR INTENTION TO INSTALL OR POST A GUARANTEE PRIOR TO ACTUAL INSTALLATION OF THE FOLLOWING IMPROVEMENTS:

IMPROVEMENTS	INSTALLATION	GUARANTEE (COST)
STREETS		
SIDEWALKS		
STREET SIGNS		
STREET LIGHTING		

14.) VARIANCES REQUESTED FROM PLAT OR DESIGN REQUIREMENTS:

SECTION NUMBER **ITEM**

A. _____

B. _____

C. _____

D. _____

E. _____

15.) LIST OTHER MATERIALS SUBMITTED WITH THIS APPLICATION

ITEM **NO. OF COPIES**

A.

B. _____

C. _____

PLEASE LIST ALL ADJOINING PROPERTY OWNERS FOR PRELIMINARY PLATS AND DEVELOPMENT PLANS: (DO NOT COMPLETE FOR MINOR PLATS) Responsibility of person presenting plat.

PROPERTY OWNER'S NAME PROPERTY OWNER'S ADDRESS

_____

_____

_____

_____

<u>COPY OF DEED (REQUIRED)</u>

I CERTIFY THAT THE INFORMATION CONTAINED IN THIS APPLICATION AND IT'S SUPPLEMENT MATERIALS ARE TRUE AND CORRECT AND HEREBY REQUEST APPROVAL OF THE SUBDIVISION PLAT AND/OR DEVELOPMENT PLAN DESCRIBED HEREIN.

APPLICANT'S SIGNATURE _____DATE

OWNER _____ DATE

FOR OFFICIAL USE ONLY

DATE RECEIVED _____DATE OF P & Z MEETING _____

ACTION BY: Planning Commission APPROVED _____ DENIED _____

IF APPROVED, THE FOLLOWING CONDITIONS AND REQUIREMENTS WERE PRESCRIBED:

1. _____

2. _____

3. _____

4. _____

5. _____

IF DENIED, REASON (S) FOR DENIAL:

1. _____

2. _____

3. _____

4. _____

5. _____

VARIANCES APPROVED (IF ANY)

_____

_____

_____

DATE _____ SIGNED _____

CODES STAFF

SITE DEVELOPMENT PLAN REVIEW

Plan Title_____Submitted Date_____

Owner Name_____

Address _____

OK	NOT OK	REVIEW ITEMS
[ ]	[ ]	1. Title block with title, date, engineer, land surveyor. _____
[ ]	[ ]	2. Owner's name, address, and location of development. _____
[ ]	[ ]	3. Street address_____
[ ]	[ ]	4. Lot numbers on plan. _____
[ ]	[ ]	5. Purpose for which site is dedicated and any reservations. _____ _____
[ ]	[ ]	6. Minimum building setback lines _____
[ ]	[ ]	7. Location of structures existing and proposed. _____
[ ]	[ ]	8. Any existing man made or natural conditions _____
[ ]	[ ]	9. Dimensions and square footage of all buildings existing and proposed. ___ _____
[ ]	[ ]	10. Parking, show existing and proposed. _____ _____
[ ]	[ ]	11. Fire Hydrant locations _____
[ ]	[ ]	12. Adjacent property owners and source of titles. _____
[ ]	[ ]	13. Site statistics including but not limited to zoning, lot sq. footage, proposed structure sq. footage, lot coverage percentage, and density. _____ _____

OK	NOT OK	REVIEW ITEMS CONTINUED
[ ]	[ ]	14. Screening Plan _____
[ ]	[ ]	15. Signs _____
[ ]	[ ]	16. Development Notes _____
[ ]	[ ]	17. Landscaping Plan _____
[ ]	[ ]	18. Engineer and Surveyor Certification _____
[ ]	[ ]	19. Owner Certification _____
[ ]	[ ]	20. City Engineer certificate _____
[ ]	[ ]	21. Utility Certificates; Water, Electric, Phone, Cable, Gas _____
[ ]	[ ]	22. Planning Commission certificate _____
[ ]	[ ]	23. City Surveyor Certificate _____
[ ]	[ ]	24. Construction Route _____
[ ]	[ ]	25. Application and fees paid _____
[ ]	[ ]	26. Solid waste service _____
[ ]	[ ]	27. Sidewalks _____
[ ]	[ ]	28. Bike Trails and Shared use paths _____
[ ]	[ ]	29. Floodplain _____
[ ]	[ ]	30. Other _____
		_____
		_____
		_____
		_____

Deficiency List

REVIEWED BY: _____

DATE _____

DEVELOPMENT PLAN

(November 21, 2004 version)

CITY LAND SURVEYOR REVIEW ITEMS

Plan Title _____ Plan Date _____

PLS Name & No_____ Date Submitted _____

Owner Name _____ Review Date _____

1. Scale of 100 feet to 1 inch or larger _____
2. Graphic Scale _____
3. North arrow with bearing basis _____
4. Vicinity sketch at a scale of 2000 feet to 1 inch _____
5. Boundary referenced to corner of parent tract; durable physical feature or control network _____
6. Tract boundary lines labeled as required by KY minimum standards _____
7. Source of title supported by submitted deeds _____
8. Location & description of monuments _____
9. Existing contours at an interval of not greater than 5 feet with statement of source _____
10. Benchmark location & elevation _____
11. Location of all existing site improvements, buildings and other structures. _____
12. Site statistics including acreage and current land use classification (zone) _____
13. Street address of lot(s) as designated by the Madison County 911 office _____
14. Adjoining Properties
    a. Owner(s) Name(s) _____
    b. Record Sources _____
15. Other _____ _____

CITY ENGINEER'S
DEVELOPMENT PLAN CHECKLIST

- ☐ Drainage designs - inlet types, elevations, pipe sizes & materials, pipe slopes etc.
- ☐ Drainage calculations - detention checklist and all other applicable calculations
- ☐ Roadway designs - horizontal and vertical alignments with stationing, horizontal and vertical curve data, typical sections, roadway slopes, pavement designs, etc.
- ☐ Specific details - entrances, curb & gutter, pavement sections, sidewalks, structures, stormwater structures, detention pond cross section, reference numbers to certified standard drawings (City of Berea, LFUCG, KYTC, etc.)
- ☐ Existing and proposed contours, proposed spot elevations
- ☐ Dimensions - parking space length & width, entrance widths, traffic lanes, sidewalks, etc.

DETENTION POND POST CONSTRUCTION CHECKLIST

Development: _____

Location: _____

Date and Time: _____

Inspector: _____

Item	Comments
I. Pond Volume and Pipe/Structure inverts **	
1. Inverts verified with submitted survey data	
2. Volume verified with submitted survey data	
II. Embankment and Emergency Spillway	
1. Vegetation and ground cover adequate?	
2. Embankment erosion present?	
3. Condition of embankment adequate?	
4. Condition of spillway adequate?	
5. Spillway material? (Concrete, riprap, grass)	
6. Slope protection or riprap failure	
III. Outlet Structure and Principal Spillway	
1. Pipe Material	
2. Low flow orifice obstructed/clear	
3. Weir Grate/Opening obstructed/clear	
4. Outlet structure condition - cracks, corrosion, etc.	
5. Silt in outlet structure or pipes?	
6. Pipe(s) condition	
7. Outfall channel condition	
IIII. Miscellaneous Comments	

** An "as built" plan sheet with sufficient survey data annotated shall be submitted for volume and invert verifications, signed and sealed by the engineer.

Design storm:	2-yr/1-hr	10-yr/24-hr	100-yr/1-hr
Design detention volume:	_____	_____	_____
Constructed detention volume:	_____	_____	_____

DETENTION POND DESIGN CHECKLIST*

Total drainage area into pond (acres)** _____

Drainage Coefficient/Curve Number (pre develop) _____

Drainage Coefficient/Curve Number (post develop) _____

Pre Development Runoff		**Post Development Runoff**	
2 year / 1 hour Q (cfs) =	_____	2 year / 1 hour Q (cfs) =	_____
10 year / 24 hour Q (cfs) =	_____	10 year / 24 hour Q (cfs) =	_____
100 year / 1 hour Q (cfs) =	_____	100 year / 1 hour Q (cfs) =	_____

Pond Routing

Outflow

2 year / 1 hour Q = _____

10 year / 24 hour Q = _____

100 year / 1 hour Q = _____

Elevations

Top of dam elevation _____

Water surface elevation 2 yr _____ 10 yr _____ 100 yr _____

Emergency spillway elevation _____

100 yr / 24 hour storm water surface elevation _____

*This checklist to be accompanied by supporting drainage calculations and data
**To include area outside of the development property if applicable

BEREA MUNICIPAL UTILITIES
DEVELOPMENT PLAN CHECKLIST

- ☐ **Load Data Sheet:** For Electric Needs

- ☐ **Elevation Level:** Rim Elevation of Two Adjacent Manholes

- ☐ **Transformers or Poles** (that they're going to feed off)

Backflow Prevention: The Cross Connection/Backflow Section of Environmental Compliance works to assure that these devices are correctly installed and properly functioning with periodic inspections and testing submitted to BMU.

- ☐ **Grease Traps:** Crock pots, warmer, coffee machines, George Foreman grill, a 3-compartment sink, prep table, salad bar, hand sink, 1refrigerator, 1freezer and 1mop sink. These are the things BMU needs to know if you have. Default requires 1,000 gallon underground grease separator tied only to kitchen plumbing, no domestic waste.

DEVELOPMENT PLAN CERTIFICATES

Certificate of Ownership and Dedication

We hereby certify that we are the owners of the property shown and described hereon and that we hereby adopt this **Development Plan** with our free consent; establish the minimum building restriction lines and propose all streets, alleys, walks, parks, and other public land shown hereon for public use.

Owner _____ Date _____

Owner _____

Berea Fire Department Certification

This is to certify that the project depicted hereon is located in the area of responsibility of the Berea Fire Department and that the proposed fire hydrants locations, spacing, and accessability meet the requirements of this department.

Fire Chief _____ Date _____

Engineering Review Certification

This is to certify that the **Development Plan** depicted hereon and the associated construction plans have been reviewed for compliance with applicable articles of the Subdivision Regulations, Zoning Ordinance and engineering detail and are accepted.

City Engineer _____ Date _____

Certificate of Approval

I hereby certify that the **Development Plan** shown hereon has been found to comply with the subdivision regulations for Berea, Kentucky, with the exceptions of such variances, if any, as are attached to this plan, and as are noted in the minutes of the Planning Commission and that it has been approved.

Approving Authority _____ Date _____

Berea/Madison County Street Department Certification

This is to certify that the layout, profile, cross sections, pavement thickness, and materials proposed hereon for streets, roadways, and other facilities to be maintained by the City of Berea meet the minimum requirements of this department.

Street Superintendent _____ Date _____

Certificates of Accuracy and Adequacy

I hereby certify that the development plan, street, drainage, sewerage, and utility construction plans, as approved by the appropriate governmental agencies, for _____, located _____are adequate to meet the requirements for the City of Berea and the Berea Planning Commission.

Firm:_____

Engineer:_____

_____

Date

Certificate of Utility Access Approval

Proposed utility access is approved as indicated.

Electrical Distribution

_____

Signature / Date

Company _____

Water Distribution

_____

Signature / Date

Company _____

Sanitary Sewer Collection

_____

Signature / Date

Company _____

Natural Gas Distribution

_____

Signature / Date

Company _____

Telephone

_____

Signature / Date

Company _____

Television Cable System

_____

Signature / Date

Company _____

East Kentucky Power Cooperative, Inc.
Conditional Notes

1) No buildings or structures of any kind shall be erected or moved upon the right-of-way area including, but not limited to, pools, antennas, storage buildings, and homes.
2) There shall be no grad work performed upon right-of-way area, either cut or fill, without written permission form the Cooperative.
3) No trees shall be planted within the right-of-way area.
4) Any relocation of the facilities of the Cooperative shall be performed at the expense of the party requesting that the facilities be relocated.
5) Any roadways constructed upon the roadway area shall be designed and constructed in such a manner that any structures, anchors, or related facilities of the Cooperative shall be protected from vehicular traffic.

EAST KENTUCKY POWER COOPERATIVE, INC.

_____

Signature / Date

PRELIMINARY PLAT

(MAY 13, 2005 version)

LAND SURVEYOR REVIEW ITEMS

PLS Name _____ **Plat Date** _____

PLS No. _____ **Date Submitted** _____

Title _____ **Review Date** _____

1.	Course &	a. Direction & Length of Each Line	_____
		b. Curve Data	_____
2.	Calculated Area		_____
3.	Contours at an interval of not greater than 5 feet with statement of source		_____
4.	Benchmark location & elevation		_____
5.	Adjoining Properties	a. Owner(s) Name(s)	_____
		b. Record Sources	_____
6.	Adjoining	a. Names	_____
		b. Record Sources	_____
7.	North Arrow	a. Bearing basis/reference meridian	_____
		b. North within 90 degrees of the "top of page"	_____
8.	Vicinity Map	a. At scale of 1" = 2000'	_____
		b. At least 1 road intersection of common reference	_____
		c. North arrow	_____
		d. Outline of subject property	_____
		e. Outline of "remainder" if applicable (e.g. if surveying acre lot out of large farm show outline of large farm as well as created lot on a vicinity	_____
9.	Cemetery		_____
10.	Scale	a. Written	_____
		b. Graphic	_____
		c. Not greater than 1" = 100'	_____
11.	Professional Land Surveyor Information	a. Name	_____
		b. Address	_____

12. Project Information
    a. Survey Title _____
    b. Parcel Location _____
    c. Client Name _____
    d. Client Address _____
    e. Parcel Owner Name _____
    f. Parcel Owner Address _____

13. Lot Design Complies with Subdivision Design Standards
    a. Minimum front yard set back _____
    b. Minimum building site width at setback _____
    c. Minimum building site area _____

14. Notes & Certificates
    a. Surveyor Review Certification _____
    b. Certification of Ownership and Dedication _____
    c. Certificate of Approval _____

15. Site Statistics
    a. Acreage of all lots _____
    b. Current land use classification (zone) _____

16. Lot and Tract Numbers _____

17. Boundary & Source of Title Supported by Submitted Deeds _____

18. Name of Subdivision _____

19. Type of Plat (e.g. minor, major, consolidation, subdivision, etc _____

20. Depiction of physical features (e.g. ponds, exiting structures, sink holes, etc.) _____

21. Location of visible utilities _____

22. Adjoining Public Rights of Way
    a. Name(s) _____
    b. ROW Width(s) _____
    c. Existing pavement width(s) _____

23. Proposed Public Rights of Way
    a. Name(s) _____
    b. ROW width(s) _____
    c. Proposed improvements cross section _____

24. Street address of lot(s) as designated by the Madison County 911 Office _____

25. Submission of digital copy (see digital submittal requirements) _____

PRELIMINARY PLAT - MAJOR SUBDIVISION CERTIFICATES

Certificate of Ownership and Dedication

We hereby certify that we are the owners of the property shown and described hereon and that we hereby adopt this **Preliminary Subdivision Plat** with our free consent; establish the minimum building restriction lines and propose all streets, alleys, walks, parks, and other public land shown hereon for public use.

_____ _____
Owner Date

_____
Owner

Berea Fire Department Certification

This is to certify that the project depicted hereon is located in the area of responsibility of the Berea Fire Department and that the proposed fire hydrants locations, spacing, and accessability meet the requirements of this department.

_____ _____
Fire Chief Date

Engineering Review Certification

This is to certify that the **Preliminary Subdivision Plat** depicted hereon and the associated construction plans have been reviewed for compliance with applicable articles of the Subdivision Regulations, Zoning Ordinance and engineering detail and are approved.

_____ _____
City Engineer Date

Certificate of Approval

I hereby certify that the Subdivision Plat shown hereon has been found to comply with the subdivision regulations for Berea, Kentucky, with the exceptions of such variances, if any, as are attached to this plat, and as are noted in the minutes of the Planning Commission and that it has been approved.

_____ _____
Berea Planning Commission Chairman Date

Berea/Madison County Street Department Certification

This is to certify that the layout, profile cross sections, pavement thickness, and materials proposed hereon for streets, roadways, and other facilities to be maintained by the City of Berea/Madison County meet the minimum requirements of this department.

_____ _____
Street Superintendent Date

Surveyor Review Certification

This is to certify that the Subdivision Plat depicted hereon has been reviewed for compliance with applicable articles of the Land Use Regulations of the City of Berea.

_____ _____
City Surveyor Date

Certificates of Accuracy and Adequacy

I hereby certify that the final subdivision plat, street, drainage, sewerage, and utility construction plans, as approved by the appropriate governmental agencies, for _____, located _____ are adequate to meet the requirements for the City of Berea and the Berea Planning Commission.

Firm: _____

_____
Engineer / Date

Certificate of Utility Access Approval

Proposed utility access is approved as indicated.

Electrical Distribution

_____
Signature / Date

Company _____

Water Distribution

_____
Signature / Date

Company _____

Sanitary Sewer Collection

_____
Signature / Date

Company _____

Natural Gas Distribution

_____
Signature / Date

Company _____

Telephone

_____
Signature / Date

Company _____

Television Cable System

_____
Signature / Date

Company _____

East Kentucky Power Cooperative, Inc. Conditional Notes

1) No buildings or structures of any kind shall be erected or moved upon the right-of-way area including, but not limited to, pools, antennas, storage buildings, and homes.
2) There shall be no grad work performed upon right-of-way area, either cut or fill, without written permission form the Cooperative.
3) No trees shall be planted within the right-of-way area.
4) Any relocation of the facilities of the Cooperative shall be performed at the expense of the party requesting that the facilities be relocated.
5) Any roadways constructed upon the roadway area shall be designed and constructed in such a manner that any structures, anchors, or related facilities of the Cooperative shall be protected from vehicular traffic.

EAST KENTUCKY POWER COOPERATIVE, INC.

_____
Official / Date

CITY OF BEREA DIGITAL SUBMITTAL REQUIREMENTS

(May 11, 2006)

No preliminary plat, major final plat, nor minor final plat will be approved unless a digital copy has been submitted to the appropriate office with the following specifications:
All submittals shall be oriented to NAD83 Kentucky State Plane South Zone (U.S. Survey Feet) Coordinate system. Consultants that are unable to orient their digital file to this coordinate system may fulfill this requirement by making an appointment to meet with staff from the appropriate office on site. The consultant shall bring a paper copy of the plat to this appointment and lead the staff member to a minimum of two points at which that staff member can then collect GPS Coordinate values.

Preliminary Plats shall contain a minimum of the following layers** both thawed and turned on:

Boundaries
Street Centerlines
Addresses
Lot Numbers
Street Names

Digital Submittals at the preliminary plat stage would provide for the necessary mapping for our emergency services' CAD System.
Major Final Plats shall contain a minimum of the following layers** both thawed and turned on:

Boundaries
Boundary Labels
Street Levels
Boundary Monuments
Addresses
Lot Numbers
Street Names

Plus all other layers so as to include anything shown on final recorded plat and all improvements AS BUILT. Those improvements would include such things as roads, sanitary sewer, water lines, fire hydrants, etc.

Each type of subject matter (e.g. boundaries, street names, water lines, fire hydrants, etc) shall be contained in a separate and uniquely named layer. A text document explaining the content of each layer shall accompany the digital submittal IF the type of content is not obvious by the layer name. For example, if the Boundary lines are contained in a layer named "bndy" or "boundary" then the text document is not needed. However, should the boundary lines be contained in a layer named "1" then a text document would be needed.
Minor Final Plats shall contain a minimum of the following layers** both thawed and turned on:

Boundaries
Boundary Labels
Street Centerlines
Boundary Monuments
Addresses Lot Numbers
Street Names

FINAL PLAT - MAJOR

(March 22, 2005)

LAND SURVEYOR REVIEW ITEMS

PLS Name _____ **Plat Date** _____

PLS No. _____ **Date Submitted** _____

Title _____ **Review Date** _____

1.	Course & Distance	a. Direction & Length of Each Line	_____
		b. Curve Data	_____
2.	Calculated Area		_____
3.	Monument Description	a. Found / Set	_____
		b. Dimensions	_____
		c. Type Material	_____
		d. ID Cap	_____
4.	Tree Monuments	a. Size	_____
		b. Species	_____
		c. Method of Marking	_____
5.	Proper Monument Type		_____
6.	City required monumentation		
		a. Iron pins with caps at bends in centerline	_____
		b. Nails at lot lines extended to centerline and/or gutter	_____
7.	Location Reference (one of following)		
		a. Corner of Parent Tract	_____
		b. Durable Physical Feature (e.g. distance to nearest road intersection)	_____
		c. Control Network (e.g. state plane coordinates)	_____
8.	Adjoining Properties	a. Owner(s) Name(s)	_____
		b. Record Sources	_____
9.	Adjoining Subdivisions	a. Names	_____
		b. Record Sources	_____
10.	Encroachments (if applicable)		_____

11. North Arrow

a. Bearing basis / reference meridian _____
b. North within 90 degrees of the "top of the page" _____

12. Vicinity Map

a. At scale of 1"= 2000' _____
b. At least 1 road intersection of common reference _____
c. North arrow _____
d. Outline of subject property _____
e. Outline of "remainder" if applicable (e.g. if surveying acre lot out of large farm show outline of large farm as well as created lot on vicinity map _____

13. Required Statements

a. Unadjusted Error of Closure _____
b. Adjustment _____
c. Land Classification _____

14. Cemetery _____

15. Scale

a. Written _____
b. Graphic _____
c. Not greater than 1"= 100' _____

16. Professional Land Surveyor Info

a. Name _____
b. Address _____
c. Dated Seal _____

17. Project Information

a. Survey Title _____
b. Parcel Location _____
c. Client Name _____
d. Client Address _____
e. Parcel Owner Name _____
f. Parcel Owner Address _____

18. Lot Design Complies with Subdivision Design Standards

a. Minimum front yard set back _____
b. Minimum building site width at setback _____
c. Minimum building site area _____

19. Notes & Certifications

a. Land Surveyor's Accuracy Certification _____
b. Surveyor Review Certification _____
c. Purpose note _____
d. Certification of Ownership and Dedication _____
e. Certificate of Approval for Recording _____

20. Site Statistics

a. Acreages of all lots _____

b. Current land use classification (zone) _____

21. Street address of lot(s) as designated by the Madison County 911 office _____

22. Lot or Tract numbers _____

23. Boundary & Source of Title Supported by Submitted Deeds _____

24. Name of Subdivision _____

25. Type of plat (e.g. minor, major, consolidation, subdivision, etc.) _____

26. Depiction of physical features (e.g. ponds, existing structures, sink holes, etc.) _____

27 State highway encroachment permit – if on state highway _____

28. Adjoining public rights of way

a. Name(s) _____

b. ROW width(s) _____

c. Existing pavement width(s) _____

29. Proposed public rights of way

a. Name(s) _____

b. ROW width(s) _____

c. Proposed improvements cross section _____

30. Submission & approval of as-built _____

31. Submission of digital copy (see digital submittal requirements) _____

PRELIMINARY PLAT - MAJOR SUBDIVISION CERTIFICATES

Certificate of Ownership and Dedication

We hereby certify that we are the owners of the property shown and described hereon and that we hereby adopt this **Preliminary Subdivision Plat** with our free consent; establish the minimum building restriction lines and propose all streets, alleys, walks, parks, and other public land shown hereon for public use.

Owner _____ Date _____

Owner _____

Berea/Madison County Street Department Certification

This is to certify that the layout, profile, cross sections, pavement thickness, and materials proposed hereon for streets, roadways, and other facilities to be maintained by the City of Berea/Madison County meet the minimum requirements of this department.

Street Superintendent _____ Date _____

Berea Fire Department Certification

This is to certify that the project depicted hereon is located in the area of responsibility of the Berea Fire Department and that the proposed fire hydrants locations, spacing, and accessability meet the requirements of this department.

Fire Chief _____ Date _____

Surveyor Review Certification

This is to certify that the Subdivision Plat depicted hereon has been reviewed for compliance with applicable articles of the Land Use Regulations of the City of Berea.

City Surveyor _____ Date _____

Engineering Review Certification

This is to certify that the **Preliminary Subdivision Plat** depicted hereon and the associated construction plans have been reviewed for compliance with applicable articles of the Subdivision Regulations, Zoning Ordinance and engineering detail and are approved.

City Engineer _____ Date _____

Certificate of Approval

I hereby certify that the Subdivision Plat shown hereon has been found to comply with the subdivision regulations for Berea, Kentucky, with the exceptions of such variances, if any, as are attached to this plat, and as are noted in the minutes of the Planning Commission and that it has been approved.

Approving Authority _____ Date _____

Certificates of Accuracy and Adequacy

I hereby certify that the final subdivision plat, street, drainage, sewerage, and utility construction plans, as approved by the appropriate governmental agencies, for _____, located _____ are adequate to meet the requirements for the City of Berea and the Berea Planning Commission.

Firm: _____

_____
Engineer / Date

Certificate of Utility Access Approval

Proposed utility access is approved as indicated.

Electrical Distribution

_____
Signature / Date

Company _____

Water Distribution

_____
Signature / Date

Company _____

Sanitary Sewer Collection

_____
Signature / Date

Company _____

Natural Gas Distribution

_____
Signature / Date

Company _____

Telephone

_____
Signature / Date

Company _____

Television Cable System

_____
Signature / Date

Company _____

East Kentucky Power Cooperative, Inc. Conditional Notes

6) No buildings or structures of any kind shall be erected or moved upon the right-of-way area including, but not limited to, pools, antennas, storage buildings, and homes.
7) There shall be no grad work performed upon right-of-way area, either cut or fill, without written permission form the Cooperative.
8) No trees shall be planted within the right-of-way area.
9) Any relocation of the facilities of the Cooperative shall be performed at the expense of the party requesting that the facilities be relocated.
10) Any roadways constructed upon the roadway area shall be designed and constructed in such a manner that any structures, anchors, or related facilities of the Cooperative shall be protected from vehicular traffic.

EAST KENTUCKY POWER COOPERATIVE, INC.

_____
Official / Date

PLANNED UNIT DEVELOPMENT PLAN

(March 24, 2005 version)

LAND SURVEYOR REVIEW ITEMS

PLS Name _____ **Plat Date** _____

PLS No. _____ **Date Submitted** _____

Title _____ **Review Date** _____

1.	Course & Distance	a. Direction & Length of Each Line	_____
		b. Curve Data	_____
2.	Calculated Area		_____
3.	Adjoining Properties	a. Owner(s) Name(s)	_____
		b. Record Sources	_____
4.	Adjoining Subdivisions	a. Names	_____
		b. Record Sources	_____
5.	North Arrow		
		a. Bearing basis / reference meridian	_____
		b. North within 90 degrees of the "top of the page"	_____
6.	Vicinity Map		
		a. At scale of 1"= 2000'	_____
		b. At least 1 road intersection of common reference	_____
		c. North arrow	_____
		d. Outline of subject property	_____
7.	Scale	a. Written	_____
		b. Graphic	_____
		c. Not greater than 1"= 300'	_____
8.	Professional Land Surveyor Info	a. Name	_____
		b. Address	_____
9.	Project Information	a. Survey Title	_____
		b. Parcel Location	_____
		c. Client Name	_____
		d. Client Address	_____
		e. Parcel Owner Name	_____
		f. Parcel Owner Address	_____

10. Notes & Certifications
    - a. Surveyor Review Certification _____
    - b. Certification of Ownership and Dedication _____
    - c. Certificate of Planning Commission Approval _____
    - d. Certificate of City of Berea Approval _____

11. Site Statistics
    - a. Acreages of all lots / tracts _____
    - b. Current land use classification (zone) _____
    - c. Proposed land uses _____

12. Boundary & Source of Title Supported by Submitted Deeds _____

13. Name of Subdivision _____

14. Type of plat (PUD Request or Proposed PUD.) _____

15. Adjoining public rights of way identified _____

16. Proposed public rights of way with width _____

17. Submission of digital copy (see digital submittal requirements) _____

PUD PLAN CERTIFICATES

Certificate of Ownership and Dedication
I (We) hereby certify that I am (we are) the owner(s) of record of the property shown and described hereon and that I (we) hereby adopt this **Planned Unit Development** with my (our) free consent.

Owner _____ Date _____

Owner _____

Surveyor Review Certification
This is to certify that this Planned Unit Development Plan depicted hereon has been reviewed for compliance with applicable articles of the Land Use Regulations of the City of Berea.

City Surveyor _____ Date _____

Certificate of Planning Commission Approval
I hereby certify that this Planned Unit Development Plan shown hereon has been found to comply with the land use regulations for Berea, Kentucky and has been approved for recommendation with the exceptions, if any, as are noted in the minutes of the Planning Commission.

Berea Planning Commission Chairman _____ Date _____

Certificate of City Council Approval
I hereby certify that this Planned Unit Development Plan shown hereon has been found to comply with the land use regulations for Berea, Kentucky and has been approved and accepted with the exceptions, if any, as are noted in the minutes of the Berea City Council.

Berea City Clerk _____ Date _____

FINAL PLAT - MINOR

(March 16, 2005version)

LAND SURVEYOR REVIEW ITEMS

PLS Name _____ **Plat Date** _____

PLS No. _____ **Date Submitted** _____

Title _____ **Review Date** _____

1.	Course & Distance	a. Direction & Length of Each Line	_____
		b. Curve Data	_____
2.	Calculated Area		_____
3.	Monument Description	a. Found / Set	_____
		b. Dimensions	_____
		c. Type Material	_____
		d. ID Cap	_____
4.	Tree Monuments	a. Size	_____
		b. Species	_____
		c. Method of Marking	_____
5.	Proper Monument Type		_____
6.	Location Reference (one of following)		
	a. Corner of Parent Tract		_____
	b. Durable Physical Feature (e.g. distance to nearest road intersection)		_____
	c. Control Network (e.g. state plane coordinates)		_____
7.	Road Names		_____
8.	Adjoining Properties	a. Owner(s) Name(s)	_____
		b. Record Sources	_____
9.	Adjoining Subdivisions	a. Names	_____
		b. Record Sources	_____
10.	Encroachments (if applicable)		_____

11. North Arrow

a. Bearing basis / reference meridian _____
b. North within 90 degrees of the "top of the page" _____

12. Vicinity Map

a. At scale of 1"= 2000' _____
b. At least 1 road intersection of common reference _____
c. North arrow _____
d. Outline of subject property _____
e. Outline of "remainder" if applicable (e.g. if surveying acre lot out of large farm show outline of large farm as well as created lot on vicinity map _____

13. Required Statements

a. Unadjusted Error of Closure _____
b. Adjustment _____
c. Land Classification _____

14. Cemetery _____

15. Scale

a. Written _____
b. Graphic _____
c. Not greater than 1"= 100' _____

16. Professional Land Surveyor Info

a. Name _____
b. Address _____
c. Dated Seal _____

17. Project Information

a. Survey Title _____
b. Parcel Location _____
c. Client Name _____
d. Client Address _____
e. Parcel Owner Name _____
f. Parcel Owner Address _____

18. Lot Design Complies with Subdivision Design Standards

a. Minimum front yard set back _____
b. Minimum building site width at setback _____
c. Minimum building site area _____

19. Notes & Certifications

a. Land Surveyor's Accuracy Certification _____
b. Surveyor Review Certification _____
c. Purpose note _____
d. Certification of Ownership and Dedication _____
e. Certificate of Approval for Recording _____

20. Site Statistics

a. Acreages of all lots _____
b. Acreages of remainders (either by survey or by deed plot) _____
c. Current land use classification (zone) _____

21. Street address of lot(s) as designated by the Madison County 911 office _____

22. Lot or Tract numbers _____

23. Boundary & Source of Title Supported by Submitted Deeds _____

24. Name of Subdivision _____

25. Type of plat (e.g. minor, major, consolidation, subdivision, etc.) _____

26. Depiction of physical features (e.g. ponds, existing structures, sink holes, etc.) _____

27 State Highway Encroachment Permit – if on state highway _____

28. Location of visible utilities _____

29. Adjoining public rights of way

a. Name(s) _____
b. ROW width(s) _____
c. Existing pavement width(s) _____

30. Submission of digital copy (see digital submittal requirements) _____

FINAL PLAT - MINOR SUBDIVISION CERTIFICATES

Certificate of Ownership and Dedication

We hereby certify that we are the owners of the property shown and described hereon and that we hereby adopt this **Minor Subdivision Plat** with our free consent; and grant to the City of Berea all easements for public utilities as shown upon this plan.

_____
Owner

_____
Date

_____
Owner

Certificate of Approval for Recording

I hereby certify that the Subdivision Plat shown hereon has been found to comply with the subdivision regulations for Berea, Kentucky, with the exceptions of such variances, if any, as are attached to this plat, and as are noted in the minutes of the Planning Commission and that it has been approved for recording in the Office of the Madison County Clerk.

_____ _____
Berea Planning Commission Chairman Date

Surveyor Review Certification

This is to certify that the Subdivision Plat depicted hereon has been reviewed for compliance with applicable articles of the Land Use Regulations of the City of Berea and the Standards of Practice (201 KAR 18:150) for professional land surveyors in the Commonwealth of Kentucky.

_____
City Surveyor Date

Certificates of Accuracy and Adequacy

I hereby certify that the Survey depicted by this plat was done by me, or persons under my direct control and supervision, by method of random traverse with radial ties to existent monuments, corners, and evidence of corners, and radial stake-out of set corners. The unadjusted precision ratio of the traverse was 1:____. The traverse (was)(was not) adjusted The survey as shown hereon is a Class ____ survey and the accuracy and precision of said survey meets all the specifications of this class. The reference meridian basis for directions on this survey was

_____

Firm:

_____

Surveyor_____

Date _____

AS-BUILT CHECKLIST

PLS/PE Name | Plan Date

PLS/PE No. | Date Submitted

Title | Review Date

1. Horizontal location of street(s)
2. Vertical location of streets(s).
3. Width of street(s) - either to face of curb or back of curb.
4. Horizontal location of sidewalks(s).
5. Parking space stripes (quantity as proposed).
6. Horizontal location of sanitary sewer.
7. Vertical location of sanitary sewer.
8. Horizontal location of storm sewer.
9. Vertical location of storm sewer.
10. Horizontal location of all additional visible utilities.
11. Land Surveyor's/Engineer's certification of accuracy of the as-built (signed & dated).
12. Land Surveyor's/Engineer's seal.
13. Digital submittal of as-built

APPENDIX I:

Fee Schedule

CODES AND PLANNING

Building Permits

Project Valuation Does Not Exceed $2000	$30
Project Valuation $2,001 to $15,000	$42 + $5 for each $1,000 over $2000
Project Valuation $15,001 to $50,000	$104 + $4 for each $1,000 over $15,000
Project Valuation $50,001 to $100,000	$244 + $3.50 for each $1,000 over $50,000
Project Valuation $100,001 to $500,000,	$380 + $2.25 for each $1,000 over $100,000
Project Valuation over $500,001	$1280 + $1.75 for each $1,000 over $500,000
Additional Inspection (beyond 2 trips)	$40/trip
Demolition permit	$30/structure
Zoning Permit	$10
Certificate of Occupancy	$10
Land Disturbance / Fill Permit	$400
Change of use inspection fee	$100
Tent or temporary structure	$125.00

Mechanical Permits (based on state mandated fees per contract)

Single Family and Duplexes	$105.00 First Unit - $50.00 Each Additional Unit
Multifamily	$105.00 First Unit - $50.00 Each Additional Unit
Commercial Buildings	Based on Cost See “HVAC Commercial Permit”
Industrial Buildings	Based on Cost See “HVAC Commercial Permit”

Sign Permits

Signs	$50
Temporary Sign Permit	$10

Electrical Fees

Residential: Single Family 100 AMP Service	$135
Residential: Single Family 200 AMP Service	$150
Residential: Single Family 400 AMP Service	$200
Duplex & Mulitfamily	$125 per dwelling unit
Commercial (less than $50,000) 200 AMP Service	$175
Commercial (less than $50,000) 400 AMP Service	$320
Commercial (less than $50,000) 600 AMP Service	$450
Commercial-(less than $50,000) 800 AMP Service	$560
Commercial-(less than $50,000) 1000 AMP Service	$650
Commercial (no new Service) less than $50,000.00	$175
Contract Based Pricing - $50,000-$200,000	Contract x 0.010
Contract Based Pricing - $200,0001-$400,000	Contract x 0.009
Contract Based Pricing - $400,001 and over	Contract x 0.008
Temporary Service (Construction Service)	$50
Service Change	$75
Mobile Home Service	$100
Trip charge or Reinspection	$75
Barns, Garages, Outbuildings, Pump Station (New Service)	$100
Signs	$75
Swimming Pools, Additions (2 trips)	$150

Application Fees and Other Service Fees

Board of Adjustment - Variance Request	$200
Board of Adjustment - Conditional Use	$200
Board of Adjustment - Appeals (refunded if appeal is won)	$100

Architectural Review Board Application Fee	$150
Architectural Review Board - Appeal Fee (refunded if appeal is won)	$75
Zone Change Request	$500
Street Cut Permit	$25 + $2.5/foot after first 20 feet

Maps, Photos & Copies

81/2 x 11 to 11 x 17 Plot of Digital Map (Existing - no drafting)	$4
18x24 plot of Digital Map (Existing - no drafting)	$6
24x36 Plot of Digital Map (Existing - no drafting)	$8
36x48 Plot of Digital Map (Existing - no drafting)	$10
8 1/2x11 To 11x17 Aerial Photo, Photo or Zone Map	$8
18x24 Aerial Photo, Photo or Zone Map	$12
24x36 Aerial Photo, Photo or Zone Map	$16
36x48 Aerial Photo, Photo or Zone Map	$24
18x24 Blueline of Survey Records	$10
36x48 Blueline of Survey Records	$12
24x36 or larger copies of plans or plats	$6 per page
Copies of Zoning and Subdivision Regulations	$10 unbound; $15 bound
Copy of Comprehensive Plan	$15 unbound; $25 bound
Copy of DVD	$5

Plat Fees

Minor Plat - All zones	$150
Development Plans - All zones	$600
Preliminary Plat - All zones	$300
Preliminary Plat Construction Plan Review (infrastructure)	$800
Final Plat - All zones	$300
Punchlist for Construction guarantee (includes one intial and one follow up inspection)	$200

Codes Enforcement

Mowing per hour (1 hour minimum)	$63.60 (1 mower + 1 laborer+ tax)
Trash removal, clean up & misc	$30/hour laborer + FEMA equipment rate/hour
Bulk item pickup (couch, mattress, carpet, etc.)	$60

APPENDIX J

MOBILE/MANUFACTURED HOME PARKS/COMMUNITIES

MOBILE/MANUFACTURED HOME PARKS/COMMUNITIES

REQUIREMENTS:

Mobile/Manufactured Home Parks/Communities shall meet all applicable requirements of this Development Ordinance in addition to state requirements as provided in K. R. S. 219.310 to 219.410, and Kentucky Administrative Regulations 902, Chapter 15.

PROCEDURES:

Applications for approval of a Mobile/Manufactured Home Park/Community shall be submitted to the Department of Codes and Planning according to the deadlines by that office. All applications shall be reviewed by the Technical Advisory Committee, and the Planning Commission in both the work session and Business Session. The following items shall be included as part of the application:

1. A preliminary or final plat (as applicable)
2. A development plan. In addition to the development plan requirements indicated in Section 401.3, 3, the following items will be shown:

    A. The area within each lot intended for location of a mobile/manufactured home and setback distances
    B. A detailed drawing of the foundation for placement of the mobile home stand within the lot
    C. The size and location of any playground areas

3. A complete copy of the submittal packet as required by state regulations as set forth in 815 KAR 25:050, 815 KAR 25:060, 815 KAR 25:070, and 815 KAR 25:080

SITE DEVELOPMENT STANDARDS:

1. Every mobile/manufactured/home park/community shall be located on a well-drained site, not subject to recurring flooding, and properly graded to provide for adequate drainage.
2. Each lot shall be numbered and the number displayed in some systematic order.
3. Dimensional Requirements:

MINIMUM ACREAGE REQUIRED FOR PARK/COMMUNITY:	10 ACRES
MAXIMUM ACREAGE ALLOWED FOR PARK/COMMUNITY:	20 ACRES
MAXIMUM NUMBER OF HOMES ALLOWED:	4
MINIMUM LOT SIZE:	10,000 SQ. FT.
MINIMUM LOT WIDTH:	100 FT.
MINIMUM FRONT YARD SETBACK:	25 FT
MINIMUM SIDE YARD SETBACK:	10 FT
MINIMUM REAR YARD SETBACK:	15 FT
MAXIMUM BUILDING HEIGHT:	20 FT

4. All lots shall be located at least twenty-five (25) feet from any park/community boundary line abutting upon a public street or highway and at least ten (10) feet from any other park/community property line.

5. All lots shall abut upon a park/community street which shall be constructed in accordance with the specifications listed in Section ___. No parking will be allowed on the street.

6. The area of the mobile home stand shall be improved to provide an adequate foundation for the placement of the mobile home. The mobile home stand shall not heave, shift, or settle unevenly under the weight of the mobile home due to frost action, inadequate drainage, vibration or other forces acting on the superstructure.

7. The proposed lot site shall be graded to provide a maximum height for the home of forty-eight (48) inches above grade, measured from the pad grade to the underside for the chassis.

8. The design and construction of all utilities shall conform to City and state requirements.

9. Sewage disposal shall be by means of the municipal sewer system. The permit holder is responsible for the storage and disposal of solid waste in accordance with local regulations.

10. The park/community shall be maintained free of insect and rodent harborage and infestation, and no condition that is detrimental to the health and safety of residents of the park/community shall be allowed

11. Every park/community shall provide a building that shall serve as an emergency shelter during severe weather and other disaster/emergency situations. The building shall be large enough to accommodate at least fifty (50) percent of the estimated occupants of the park (calculated at 2.5 persons per home).

12. The park/community shall provide a minimum site area of five (5) percent of the total acreage to be developed as a park/playground and green space for residents of the park/community.

APPENDIX K
HAZARDOUS WASTE MANAGEMENT

HAZARDOUS WASTE MANAGEMENT

PURPOSE:

The purpose of these regulations is to insure that any industries involved in the storage, treatment, and disposal of hazardous wastes do so in a manner that protects the environmental quality of the site and the immediate surroundings as well as the health and safety of the general public.

REQUIREMENTS AND CONDITIONS:

The use and management of hazardous wastes in the City of Berea shall be subject to the following requirements and conditions:

1. The request to establish a new I-1 District shall follow the procedures for amending the Official Land Use Management Map as described in Sections 401.2 and 401.3. All conditional use permits for development to be located in an existing I-1 District shall be reviewed by the Berea Board of Adjustments prior to taking effect.

2. The storage, treatment, and disposal of all hazardous wastes shall be subject to the requirements and conditions of this ordinance as well as K. R. S. 224, and all other state and federal regulations relating to hazardous wastes.

3. The minimum dimensional requirements established for the I-1 District (Section 406.3) may be increased to provide adequate protection for surrounding land uses.

4. The facility shall not be established or constructed in a wetland as defined under Section 404 Clean Water Act, or in the recharge zone of an aquifer, nor shall it be established in a 100-year flood plain. The potential impact of the facility on other nearby water resources (both surface and subsurface) shall be reviewed.

5. Consideration shall be given to the physiography, soil conditions, and geology of the site and surrounding area.

6. The location of such facilities shall comply with all applicable state and federal wildlife regulations.

7. Transportation to and from the site shall be addressed to include the methods by which the waste will be transported, frequency of movements, the location and condition of roads that will provide access to the site, safety, noise and traffic disruption factors, and the potential impact on land uses and population along the routes involved.

8. The proposed facility shall be compatible with surrounding land uses.

9. The type of activity to be conducted on the site together with the type and volume of hazardous waste to be managed.

10. Any other information that may be required by the City of Berea.

APPENDIX L

REGULATION OF CELLULAR ANTENNA TOWERS

REGULATION OF CELLULAR ANTENNA TOWERS

AUTHORITY:

In accordance with the provisions of K.R.S. 100.987, the Berea Planning Commission may plan for and regulate the siting of cellular antenna towers in accordance with the regulations provided in this ordinance. Every utility or a company that is engaged in the business of providing required infrastructure to a utility that proposes to construct an antenna tower for cellular telecommunications services or personal communications services within the corporate limits of Berea shall submit an application for approval to construct an antenna tower to the Planning Commission for review.

APPLICATION REQUIREMENTS:

The uniform application shall include a grid map that shows the location of all existing cellular antenna towers and that indicates the general position of proposed construction sites for new cellular antenna towers within an area that includes:

1. The incorporated area of the City of Berea; and
2. A one-half (½) mile area outside of the boundaries of the City, if that area contains either existing or proposed construction sites for cellular antenna towers.

The application shall include any contract with an owner of property upon which a cellular antenna tower is to be constructed. A provision that specifies, in the case of abandonment, a method that the utility will follow in dismantling and removing a cellular antenna tower, including a timetable for removal; and shall comply with any local ordinances concerning land use, subject to the limitations imposed by 47 U. S. C. sec. 332(c), KRS 278.030, 278.040, and 278.020.

All information contained in the application and any updates, except for any map or other information that specifically identifies the proposed location of the cellular antenna tower then being reviewed, shall be deemed confidential and proprietary within the meaning of KRS 61.878. The Planning Commission shall deny any public request for the inspection of this information, whether submitted under Kentucky's Open Records Act or otherwise, except when ordered to release the information by a court of competent jurisdiction. Any person violating this subsection shall be guilty of official misconduct in the second degree as provided under KRS 522.030.

APPENDIX M

CHESTNUT STREET DESIGN OVERLAY DISTRICT

AERIAL PHOTO AND AREA COVERED BY CHESTNUT STREET OVERLAY

Chestnut Street Design Overlay District–Demolition

The loss of existing houses is the action that could make the greatest negative change to the Chestnut Street Neighborhood.

A property owner is entitled to demolish a building in the Overlay District, provided that:

a. The owner has applied to the City of Berea for a Demolition Permit and
b. The owner has for a period of time, for a reasonable price, made a bona fide offer to sell the building and its property. The time schedule for offers to sell shall be as follows:

    1. Three (3) months when the offering price is less than $50,000
    2. Four (4) months when the offering price is $50,000 - $74,999
    3. Five (5) months when the offering price is $75,000 - $99,999
    4. Six (6) months when the offering price is $100,000 - $124,999
    5. Seven (7) months when the offering price is $125,000 - $149,999
    6. Twelve (12) months when the offering price is $150,000 or more

The Board of Design Review (BDR) may question whether the offer to sell is at a price reasonably related to its Fair Market Value. The BDR, within ten (10) days of receipt of notification of the intent to sell, may protest the offering price. The BDR may then appoint three (3) disinterested appraisers who will make and file with the secretary of the BDR an appraisal of whether or not, in their opinion, the offer to sell the property in question is at a price reasonably related to its Fair Market Value.

<u>Chestnut Street Design Overlay District–Site Features</u>:

Driveways and Parking

Location
Driveways should be located as close to the side lot line as allowed by zoning (More Information Required).

Width
Driveways should be a maximum of twelve (12) feet wide to the mid-line of the house and may widen at that line.

Size of Parking Area
Car parking areas should be behind the front line of the house. If parking is provided for more than three cars, it should be completely screened by house, garage, and/or landscaping.

Material
Driveways should be turf block pavers, brick or similar pavers, concrete, asphalt, or gravel. Gravel paving must be contained by an edge material.

Fences, Walls, and Plant Material

Fence and wall location, height, and material
Fences in front yards should not be higher than 3-1/2 feet (42 inches) high and should be open in design. Low garden are suitable in front yards, but should not be higher than eighteen (18) inches. Chain link or wire fences should not be used in front yards..

Fences and walls in back yards should not be higher than six (6) feet and may be open or solid. Chain link fences should not be clearly visible from Chestnut Street.

Fence and Wall Material and Color
Fence and wall material and color should be compatible with houses and other features in the Chestnut Street neighborhood.

Tree Planting and Removal
Planting canopy trees, particularly in front yards is encouraged. Care should be taken to avoid planting under utility lines.

Removing a tree greater than 12 inches in trunk diameter that is in front of the front building line requires a COA

Chestnut Street Design Overlay District–New Construction and Additions:

Materials:
Materials used to clad houses should be compatible with other materials on Chestnut Street. These include brick of various colors, concrete block with the appearance of ashlar stone, and clapboard with a 3-1/2 - 5 inch width. Vinyl or other siding materials are acceptable if they mimic the appearance and width of clapboard.

Color:
Exterior colors should be compatible with existing houses on Chestnut Street.

Additions

Location
Additions should not change the appearance of the facade facing Chestnut Street. Additions should be recessed behind the front plane of the Chestnut Street facade.

Size
The size of additions is not regulated except that the total size of the addition combined with the existing house should not exceed 1500 square feet in footprint.

Height
Additions should not alter the apparent height of the existing house. If any part of the addition is higher than the existing building it should be set back far enough that it does not overwhelm the existing building.

Roof Shape and Pitch
The roof pitches of additions should relate to the pitches of existing building roofs. Breaks in roof elevation or ridge direction between existing buildings and additions are encouraged.

Windows
Window type and proportion should match the original building. For most houses on chestnut Street, that means they should be double hung and vertically proportioned with a horizontal to vertical dimension ratio from 1:2 to 1:2.6

Materials
Cladding materials should be compatible with the existing building. When the same material is used, care should be taken that dimensions or other characteristics are consistent. For example, bricks should match in color and siding should match in width.

Color
Addition colors should be compatible with the existing building and with other houses in the Chestnut Street Neighborhood.

Chestnut Street Design Overlay District–New Construction

Location on Lot
New house construction should be set back a minimum of twenty-five (25) feet and a maximum of one hundred (100) feet from the Chestnut Street right-of-way. A set back near the average for existing houses on Chestnut street of forty-eight (48) feet is encouraged. Side yards are required by zoning regulations to be fifteen (15) feet. In the case of lots that are less than seventy (70) feet wide, a variance should be allowed to reduce the side yards to ten (10) feet.

Ground Coverage
The building code requires buildings to be ___. New houses should be at least 700 square feet in footprint, and no more than 1800 square feet in footprint area. (This section also requires more information).

Number of Stories
New houses should be at least 1-1/2 stories in height and no more than 2-1/2 stories in height. Houses should be constructed on a basement or a raised foundations as opposed to a slab.

Roof Shapes and Pitch
Roof shape and pitch should share characteristics of existing houses. Roof pitches should be at least 4:12, but should not exceed 12:12. Roofs with more than one ridge are encouraged: either cross-gable, or with dormers, or other multiple ridge designs.

Elevation Characteristics
At least one gable form should face toward the street: either the main mass of the house, a cross-gable, or one or more dormers. Building masses that project or recess from the main mass are encouraged.

Porches
New houses should be built with porches that extend across at least 2/3 of the width of the Chestnut Street elevation. Full-width or wrap-around porches are encouraged. Porches should be roofed, and their enclosure should be open in appearance. Columns and handrails should be compatible with those existing on Chestnut Street.

Windows
Windows should be oriented vertically. Window proportion should be with the range of 1:2 to 1:2.6 horizontal dimension to vertical dimension. For example a 30 inch wide window should be between 60 inches and 78 inches high. When wider window area are desired, multiple windows should be placed side by side to create a wider expanse. Windows should be trimmed with minimum 4 inch trim boards.

Chestnut Street Design Overlay District–Garages and Outbuildings

Location
The front of a garage should be behind a line drawn through the middle of the house, measured from front to back. Garages should be no closer than ___ to the side or rear lot line. The position of the garage should make it possible for two cars to park and still be behind the front line of the house.

Size
Garage size is flexible, but the elevation visible to Chestnut Street should not be larger than two bays in width (24 feet).

Height
The eave of a garage should be equal to, or lower than, the eave of the house.

Roof Shape and Pitch
Garage roof shape and pitch should be similar to the house or compatible with neighboring garages.

Doors and Windows
Garage doors are encouraged to face away from the street. In any case, only one door may face the street if it is not screened from view by the house or landscaping. Windows facing the street, either in the garage door or in the wall, are encouraged.

Materials
Garage cladding materials should be similar to the house. Metal cladding is not suitable.

Color
Garage color should be compatible with the house and the neighborhood.

APPENDIX N

NORTH BROADWAY OVERLAY DISTRICT

"OLD TOWN DESIGN OVERLAY DISTRICT"

Introduction

These Guidelines are written for the Old Town Design Overlay District in Berea, Kentucky. Design review guidelines are the primary tool the City of Berea has chosen to maintain the appearance and enhance the economic vitality of those neighborhoods or commercial districts in the city that voluntarily choose to become a design overlay district. The guidelines in this publication will be used by the City staff and a Design Review Board to determine the appopriateness of visible external changes to buildings or properties in the designated district. Property owners should use the guidelines to ensure that their project meets the intent of the overlay district. These guidelines apply to new construction, remodeling, additions, signs or other major external changes.

The Old Town District consists of a mostly commercial area and a mostly residential area. The two areas have distinctly different kinds of physical character and they are described in the Guidelines as the Broadway Character Area and the Neighborhood Character Area.

The guidelines recognize the fact that in both of the district's character areas some properties that were built as residences have been converted to business use, others have not been converted but are zoned for business use, and that this process of conversion may continue in the future. The design guidelines address the concern that the character of the residential neighborhood be protected by creating a buffer zone in which present and future businesses be housed in buildings that are compatible with the neighborhood.

In the Broadway Character Area, changes to existing buildings should follow the guidelines for the building type: storefront commercial, utilitarian commercial, or residential. If a building is being demolished and replaced, the new construction may use the guidelines of any of the three building types.

In the Neighborhood Character Area, the guidelines for residential buildings are the only ones that should be used, so that the character of the residential area is protected.

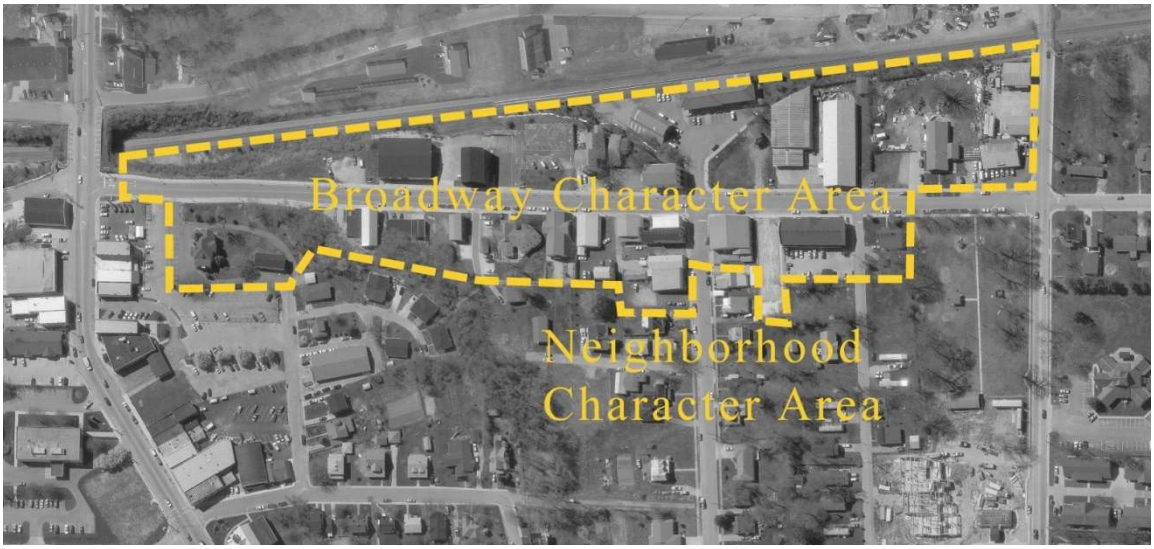

Broadway Character Area

The character of Broadway and the first block of Adams Street reflects patterns that were established in early part of the twentieth century. A few buildings surrounding the corner of Broadway and Adams were built on the sidewalk line and nearly adjacent to each other. Buildings along the rest of Broadway were varied in spacing and setback.

That pattern has held true with modern development. Buildings are set back from the sidewalk according to their intended function when they were constructed. The general character of the Old Town district is that spacing and organization is fairly loose and informal, the buildings are mostly plain and simple, and density of development is low for a commercial district. There are buildings that punctuate the district with their distinctive character. The depot, the log cabin and park, and the cluster of buildings at the corner of Adams and Broadway provide a clear focal point to the district.

There are three basic building types in the Broadway character area: storefront commercial buildings, utilitarian commercial buildings, and residential style buildings.

Storefront commercial buildings

Of 14 storefront commercial buildings, 10 are built directly on the sidewalk and four are set back some distance from the walk. The 10 buildings on the sidewalk line are mostly in a traditional downtown relationship with neighboring buildings, either immediately adjacent or with no more than the width of a drive between them neighboring buildings. One building, 125 N. Broadway, is set between two parking areas.

Traditional storefront commercial buildings in Old Town are clustered near the intersection of Broadway and Adams Street.

The four storefront commercial buildings that are set back from the sidewalk have varied site configurations. 208-210 N. Broadway has an 8-10 foot strip of grass between the public sidewalk and the sidewalk under the building overhang and is situated between Washington Street on the north and 206 N. Broadway on the south. 206 N. Broadway is about 15 feet behind the sidewalk and is set closely between 208 N. Broadway and 202 N. Broadway. 301 W. Jefferson has a 35 foot deep parking area between it and the sidewalk, a slightly narrower parking apron between the building and Jefferson Street, and another parking area between it and 217 N. Broadway to the south. 2 Depot Circle fronts directly onto the Depot Circle without a direct relationship to nearby buildings.

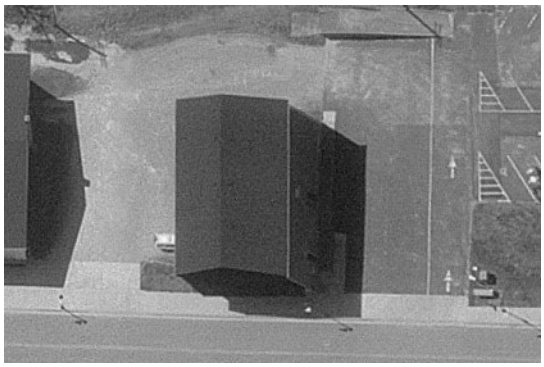

Storeftont commercial buildings are positioned on their lots in many different ways: adjacent to the right-of-way (top left), on the right-of-way but between parking areas (top right), behind a front yard (middle left), or behind parking areas (middle right and bottom left).

The storefront commercial buildings are not consistent as building types beyond the fact that they all present some type of retail-oriented façade. They are a mix of heights, of roof shapes, materials, and front wall configurations.

Three of the buildings (139 N. Broadway, 140 N. Broadway, and 219 Adams) are straightforward two-story traditional commercial buildings. Two of these have gables facing the street and the other one has a straight cornice line. All three share a typical pattern of a greater amount of window space on the ground floor than on the second floor. Two have had large ground floor windows reduced in area.

Three more buildings (130, 136, and 202 N. Broadway) are one-story but still fairly traditional in their retail character. These three buildings all have gables that face Broadway and a generous amount of window area facing the street. 202 N. Broadway also has a wall facing Adams Street which is not as well-developed as a retail façade.

217 Adams Street is a one-story building with a nearly two-story flat-topped front added to its street face. Its window area is fairly small compared to other retail facades in Old Town.

215 Adams Street is a two story building with a flat cornice facing the street. The building is unusual because the second story appears to have never had windows on the street side. The window area has been reduced substantially on the left side of the ground floor. The right side appears to maintain the original window and door design.

125 N. Broadway, 128 N. Broadway, and 2 Depot Circle are all non-traditional two-story building forms of modern construction. 128 N. Broadway and 2 Depot Circle have gambrel roof gables facing the street. Each has a set of windows centered into front wall of the upper story and window area on the ground floor that is somewhat smaller than a typical retail façade. 125 N. Broadway has an unusual mansard-like roof covering the street face of the second floor. There are no windows on the upper floor, but the ground floor has large display windows.

301 W. Jefferson is a low one-story building with a gable facing away from Broadway.

206 N. Broadway is essentially a one-story building with a suggestion of a second-story given by the upper level windows. The building has windows flanking the front door, but no window display area.

208-210 N. Broadway has a long two-story face on Broadway. The second story has residential scale windows and overhangs the first story by about 6 feet. The first story has windows and doors that are small compared to most retail buildings. 208-210 is unusual in the width of the façade and the number of different businesses that can be housed within that width.

139 N. Broadway, 219 Adams, and 140 N. Broadway

136 N. Broadway

130 N. Broadway

---

202 N. Broadway

217 Adams

215 Adams

125 N. Broadway, 128 N. Broadway, and 2 Depot Circle

301 W. Jeffereson

208-210 N. Broadway

Utilitarian commercial buildings

Of eight utilitarian commercial buildings, only three are set directly behind the edge of the sidewalk. Three buildings have parking aprons between them and the sidewalk, and two are fronted by lawns. All of the utilitarian commercial buildings stand separately from their neighbors.

Utilitarian commercial buildings in Old Town are located away from the the intersection of Broadway and Adams Street.

The utilitarian buildings have few common threads that unite their appearances. All except one are one-story buildings. All except one appear to have been built no earlier than the 1950s. Beyond those two characteristics they are individual in character.

119 N. Broadway has its long side turned toward the street and its gable at right angles to Broadway. The left side of the building has a customer entrance and small display windows. The right side is mostly blank but with a large vehicle door for receiving materials and sending out products.

137 N. Broadway is a very small building set behind a parking area. Its gable end is perpendicular to the street, visually minimizing the size of its façade area. The one display window is small.

207 N. Broadway is a large, low roofed building formerly used as a boat manufacturing facility. It has a display room attached to the front with a large expanse of glass. A garage door entry into the building's workspace faces Broadway but is set well behind the showroom space.

211 N. Broadway is a skating rink with its front set immediately adjacent to the sidewalk. The gable end faces Broadway with a double door and no display windows.

217 N. Broadway is set about 30 feet behind the sidewalk, with a lawn filling the distance. The main structure has a gable end facing Broadway with a centered door and small display windows flanking the door. A gabled addition is set back further with one door and window.

The old Berea jail is about 15 feet from the sidewalk. The formerly flat roofed building has had a recent gable roof addition made. The door is flanked by residentially-scaled double hung windows with jail bars.

118 N. Broadway is a former service garage with a flat cornice. The wall facing Broadway is divided into three sections: the right section has an access door and an overhead door into a garage bay, the middle section has two garage bays with overhead doors, and the left section was formerly a large area of glass that has now been filled in with siding, a door and three small windows. The building is set about 20 feet behind the sidewalk.

116 N. Broadway is set immediately on the sidewalk, which slopes dramatically across the width of the front wall. The building has a two-story section with a gable front, and a one-story section with a flat cornice. The two-story section has a central door flanked by small display windows, and the one-story section has two doors and a similar display window.

119 N. Broadway

137 N. Broadway

207 N. Broadway

211 N. Broadway

217 N. Broadway

The old Berea jail

118 N. Broadway

116 N. Broadway

Residential-style buildings

There are three residential-style buildings used for business purposes and one other that is still a residence in the character area and all are set back from the sidewalk.

Utilitarian commercial buildings in Old Town are located away from the the intersection of Broadway and Adams Street.

135 N. Broadway was built with combination studio and retail space on the ground floor and dwelling space above. The building is irregularly massed with a central tower that emphasizes the front entry. A parking apron fills most of the space between the front wall and the sidewalk.

126 N. Broadway is a house whose area has been at least doubled with an addition and that is used as a dentist's office. The addition is turned at a 45 degree angle to the original building which minimizes its scale relative to the original building. Parking is to the side with lawn between the building and the sidewalk.

110 N. Broadway is a large home set on the top of the hill that is used as a funeral home. It is set quite far from the sidewalk and is accessible by way of the drive to its parking lot. Lawn atop a stone retaining wall occupies the space between the house and the sidewalk.

212 N. Broadway is a one story house still used as a residence.

135 N. Broadway

126 N. Broadway

110 N. Broadway

212 N. Broadway

Design and Infrastructure Assets

- Ample public parking relieves the need for on-site parking at every property.
- Public parking is concentrated near the center of the district.
- Loosely-knit development pattern accommodates different building sizes and site plan configurations.
- Railroad depot creates a strong image focus in the center of the district.
- Traditional commercial buildings at the corner of Broadway and Washington visually and functionally support the depot as a center for the district.
- Recent streetscape development has created an infrastructure of sidewalks, lighting, and landscaping that supports private development efforts.
- Streetscape features including the lights, railings, and the stone retaining wall have established a workable materials vocabulary for public space in Old Town.

Future Development Opportunities and Challenges

- Many utilitarian buildings are under-utilized and are available for expansion of artisan-oriented businesses
- Utilitarian buildings offer ample space for workshops and studios, but most lack optimal retail space or street presentation
- Older storefront commercial buildings adjoin the sidewalk edge and have facades designed for window shopping.

- Recent commercial buildings lack an optimal retail presence because they are set back from the sidewalk or have front facades with windows that are under-sized for adequate retail display
- Many properties have parking areas or the space to develop parking areas that can be designed so that they also support streetscape continuity.
- Open lots and space on developed lots create opportunities for new building development.
- Buildings with functional limitations may be expanded in the future or replaced with new buildings suited to the artisan and retail marketing intent for Old Town.

Design Goals

1. To preserve remaining historic buildings.

2. To continue the use of traditional building materials.

3. To design new storefront commercial buildings with mass, form, and facades similar to the buildings adjacent to the Broadway and Adams intersection , but without imitating historic details.

4. To align new storefront commercial buildings at the sidewalk edge.

5. To rehabilitate existing service buildings so that they have an inviting retail façade and a functional, but non-intrusive work façade.

6. To design new utilitarian commercial buildings that combine artisan workspace and retail space.

7. To rehabilitate off-street parking areas so that they are screened and landscaped attractively.

8. To design existing space between sidewalks and both types of commercial buildings as positive open space that can be used by pedestrians or contribute aesthetically to the character of Old Town.

9. To develop vacant space between buildings, either as new buildings or as landscaped parking, where needed.

10. To promote a friendly and walkable pedestrian environment

Neighborhood Character Area

The area described as the neighborhood character area in this document is more extensive than the area that is zoned for business uses. A major concern with conversion of residential properties to business uses is that they not conflict in their design character with the continued residential use of the rest of the neighborhood. A larger area of the neighborhood, therefore, is described in this document to develop a sense of the design character to which businesses in the neighborhood character area should adhere. The guidelines themselves will apply only in the smaller area that is zoned for business uses. If additional areas are re-zoned for business use in the future, or if neighborhood residents choose to apply the guidelines to residentially-zoned properties, then the guidelines could be extended into those areas later.

The neighborhood character area reflects its early development as a semi-rural neighborhood on what was once the edge of Berea. Lot sizes are mainly in the range from 1/6 acre to ½ acre. Most houses are set fifteen to thirty feet from the back edge of the sidewalk. Side yard widths vary widely. Automobile access to lots and garages is from the street side because there are no alleys in most of the neighborhood. There is an interconnected set of alleys in the area southeast of the intersection of Adams and Broadway. These alleys create opportunities for property development and for vehicular or pedestrian access in that area. There are few street trees in the neighborhood. The space between the walk and curb is inadequate for trees, and few property owners have planted trees in their front yards. Other landscaping is minimal on most properties.

The neighborhood character area contains only residential style buildings and accessory buildings such as garages and storage buildings. House types are varied in style. There are one and two-story T plan houses (literally with a floor plan shaped like a T), two-story I houses (with a floor plan in a line parallel to the street), a Cumberland house (with two doors centered in the front wall), Bungalows, and irregular plan houses. Perhaps the one significant shared characteristic is that there are no ostentatious houses in the neighborhood. From the most humble in size and character to the largest and most carefully detailed houses, there is a sense of restraint in design. One significant lesson to be observed from the existing houses for those who may desire to convert a property into business uses is that the houses with a gable facing the street present a much more prominent face to the public. Single-story buildings whose gables face away from the street present a particularly small surface to catch the attention of shoppers or visitors.

Selected building descriptions

Adams Street, number unknown, is a two-story I-plan house with a porch across 3/4s of the front wall. Its original clapboards are covered with masonite siding.

118 Adams is a two-story Cumberland house with a porch across most of its width. It has a metal roof and the original clapboards are covered with aluminum siding.

119 Adams is a two-story Craftsman-style house with symmetrical cross gables. The hip-roofed porch is nearly the width of the front wall. The house retains its original cladding of shingles.

122 Adams is a two-story Bungalow with a large gabled dormer facing Adams Street. A full-width porch is set under the main roof of the house. The original clapboard has been covered with vinyl siding.

129 Adams is a two-story T plan house with a porch that wraps around the front and the left side. It has been covered with vinyl siding.

201 Adams is a two-story irregular plan house with three steep gables facing the street. There is a porch across the front of the right two bays of the house. 201 is clad in wood clapboards and has a metal roof.

206 Adams is another two-story T plan house.

Adams Street, number unknown

118 Adams

119 Adams

122 Adams

129, 201, and 206 Adams

Design and Infrastructure Assets

- Adams Street has parallel parking on both sides of the street so there is reduced need for additional parking on private property.
- There are sidewalks on both sides of Adams Street for good pedestrian circulation.
- Houses are close enough together to allow a reasonable concentration of business enterprises within a walkable distance.
- The unpaved alleys to the southeast of the corner of Broadway and Adams present future access and development opportunities.
- Open lots and lots occupied by mobile homes on Washington Street may present future development opportunities.

Future Development Opportunities and Challenges

- House sizes vary in their ability to house a business. Some are large enough as is, but many would need to be added onto.
- Most lots are of a size suitable for small parking areas to the side or rear of lots.
- Sidewalks or other pedestrian paths are needed on Washington Street if business development occurs there.
- Broadway provides the only pedestrian link between Adams and Washington Streets. A walkway further east between Adams and Washington Streets would provide another pedestrian link and increase convenience.

Design Goals

- To maintain residential character and compatibility between residential and business uses.
- To encourage pedestrian circulation by minimizing driveway interruptions of sidewalks and by maintaining attractive front yards and entries.
- To locate parking behind buildings and screen it from neighboring properties streets.
- To design new buildings, additions, or remodeling so that they are similar to the appearance of existing residential buildings.
- To encourage the development of windows, doors, or other façade elements that serve the retail purpose of business buildings in balance with the goal of residential compatibility.
- To encourage creative but restrained signs that fit within the neighborhood character area.

Design Guidelines: Storefront Commercial Buildings

Rehabilitation of existing storefront buildings, additions, or new buildings should continue the essential form of traditional retail buildings as relatively deep buildings that use the full width of their primary street façade to display merchandise and invite entry. Building sites should be developed with a clear orientation to the street and pedestrians to invite the walking and shopping behavior that enhances retail businesses.

Site Guidelines

Parking

On-site parking for customers is not typically necessary because of nearby on-street and public parking lots. On-site parking for owners and employees, if possible on the property should be provided so that public spaces are available for shoppers.

- If parking is provided, the drive should not exceed 24 feet in width at the sidewalk. The sidewalk should be continuous across the driveway.
- Parking should be screened with plantings, brick or stone walls, or should be hidden behind the building.
- Garbage containers of any size should not be visible from the street.

Street Frontage

Pedestrian movement through a shopping district is encouraged by close spacing between buildings and by well-designed retail facades that are set close to the street. Close spacing between buildings maximizes the number of businesses that can be accessed within a given walking distance and avoids the feeling of "dead space" between buildings. Setting buildings close to the street enlivens the sidewalk experience, brings display windows into close viewing distance, and makes access simple.

- Buildings should be set on the right-of-way line or up to ten feet behind it.
- If buildings are set back from the sidewalk, the space between the sidewalk and the building front should be developed as positive open space. Positive open space is defined as any of the following:
    - semi-public sitting space,
    - an outdoor foyer to a building,
    - display space for sculpture, art pieces or products, or
    - well-landscaped areas that contribute texture and color to the sidewalk.

Site Lighting

A design theme for street lighting has already been set for Old Town by the pole mounted street lights on Broadway. Site lighting on private property does not necessarily need to use the same pole and fixture, but should use products similar in quality. Site lighting should be only directed at those areas that require night lighting to avoid over-lighting and light pollution of the neighborhood.

- Ground or pole-mounted flood lights directed at buildings should not be used.
- Pole mounted lighting in parking areas and in spaces between building fronts and the street should be shielded to avoid glare.

Mass and Scale

Width

Storefront commercial buildings in Old Town have traditionally varied in width from 25 feet to 50 feet. These widths are in scale with pedestrian walking speeds and with the typical space needs of artisan-related retail businesses.

- New storefront buildings should be between 25 and 50 feet in width.
- Buildings that are wider across the street façade should use a change in design features to suggest the traditional building widths. Changes in facade material, window design, facade height or decorative details are ways in which this could be achieved.

Height

Commercial buildings in Old Town have traditionally been two stories in height, with a ground floor height from 10-14 feet and a second floor height from 9-12 feet. Maintaining a pattern of two story buildings helps to create a stronger and more visible overall streetscape character for Old Town. This is particularly important because most buildings are spaced some distance apart from their neighbors.

- Buildings should be two stories in height with the first story taller than the second story.

Roof Form

Roof forms have traditionally been sloped to the back or with a gable facing the front. Both roof types allow decorative features or patterns to be developed: a decorative cornice on a building with a roof that is flat or sloped to the back, or a pediment or other gable feature on a front facing gable roof.

- Roofs may slope to the rear with a front parapet wall and cornice or may have a gable facing the front.
- Roofs should not make up more than 25% of the visible façade area of a building.

Front Wall Plane

Storefront commercial buildings should follow a traditional compositional organization, including an articulated lower façade, a distinguishably different upper façade, and a cornice or other capping feature. Visual separation between the lower and upper sections of the façade creates an orientation toward pedestrians. Some design elements that can successfully create this separation include awnings, varying textures, varying window patterns, sign friezes or storefront cornices, and avoiding signage that overlaps floor levels.

Entries

Architectural detail should create an easily identified and welcoming entrance. Recessed primary entrances provide a shaded area that helps to define doorways and to provide shelter to pedestrians. The repetition of this feature along the street contributes to a pedestrian scale and invites shoppers to enter buildings. Other details that can emphasize entries include decorative entryway paving, window bulkheads of contrasting materials flanking entryways, and awnings or projecting signs placed directly over entries.

- Entries should be on the primary, street-facing façade of a building.
- Set the door back from the front facade an adequate amount to establish a distinct threshold for pedestrians. A recessed dimension of four feet is typical.
- Where entries are recessed, the building line at the sidewalk edge should be maintained by the upper floor(s).

Windows

Window design should respect traditional patterns of size, proportion, spacing and rhythm. First floor window and display design should create a feeling of transparency on the ground floor of buildings. This contributes to a sense of safety and is welcoming to pedestrians.

- The viewing zone of the first floor façade, from two feet to eight feet above ground, should be made up of at least 70% clear glass.
- Sill heights for first floor windows should not be more than 30 inches above the ground.
- Second floor windows should take up proportionately less surface area, between 25% and 50% of the wall area.

Side Walls

Buildings that are spaced apart from their neighbors or that are positioned on

corners may have visible side walls. The sidewalls may or may not serve as entrances, but still make a visual contribution to the character of Old Town.

- Buildings on corner lots should consider special features that add accent to both streets. Corner entrances, special architectural features, and storefront windows that extend along both street facades are examples.

- Buildings not on corners, but whose side walls are exposed, should be considered for the use of other architectural features that will add character to the façade even though display windows or entrances may not be appropriate. Example of these features include masonry patterns, trellises with planting, planting beds, windows, artwork, lighting fixtures, and recesses or projections in the wall plane.

Other wall elements

Awnings

Awnings have a traditional function to shade and shelter the sidewalk and to control the amount of light entering shop windows. The shade they cast on windows reduces glare and makes it easier for pedestrians to see window displays. They also have an aesthetic function by providing color, pattern, and a horizontal band in the composition of a building façade. Awnings can serve as part of the sign package for a building.

- Awnings should be made of canvas or a canvas-like material and should be sloped with a shed roof profile.

- Pre-formed plastic bubble awnings should not be used.

- Business identification that is painted or appliquéd on an awning is appropriate.

- Awnings should respect the horizontal dimension of buildings and should be dimensioned to relate to other building features. They typically should extend nearly the full length of the front wall, but may be dimensioned to fit over individual windows or sets of windows.

- Awnings should fit the vertical dimensions of a storefront. The top edge of an awning should be aligned with the top of the transom window or below decorative molding that may separate the first floor from the second floor.

- Awnings should be lit with external, shielded lighting. They should not be internally lit or back-lit.

Lighting mounted on buildings

Lighting mounted directly on buildings is valuable for supplementing street lighting, for accenting building features and illuminating signs.

- External light fixtures should be complementary to the design of the rest of a building.
- Light fixtures should be mounted so that the fixture projects out from the building and so that the light is aimed toward the building façade, awning, or sign.
- Lighting should be shielded so that glare is not directed away from a building.
- Floodlights that are directed upward to illuminate large areas of building walls should not be used.

Utility Meters

- Meters and other utility features should not be visible from streets, walks, or other public areas.
- Vending machines should not be located on the fronts of buildings.

Design Guidelines: Industrial commercial style buildings

Utilitarian commercial buildings carry on two Berea traditions. One of those is related to the railroad and the kinds of businesses that located along it in the days when the depot was active. Lumber sales and other shipping-dependent businesses devoted a portion of their space to customer reception and a larger portion of space to warehousing or fabrication. The other tradition is that of the artisan. These Berea businesses need space that allows for retail display and sales along with space for production. In addition, artisan businesses may need the ability to receive bulk materials or to load products to be shipped to other sales outlets.

Utilitarian commercial buildings should follow the guidelines for storefront buildings with the exceptions described below.

Site Guidelines

Street Frontage

Unlike storefront buildings, the space between utilitarian commercial buildings and the street may serve two purposes: access for customers and access for supplies and shipping. In addition, buildings may be designed to allow some type of view of an artisan's workspace. Given these needs, greater flexibility in the design of the building façade and the space between it and the street is necessary.

- Buildings should be set on the right-of-way line or up to 30 feet behind it.
- The space between a building and the sidewalk may be used as landscaped entry or display space, loading and service space, or as a space to allow a view into a workspace. Loading and service space should occupy less than half of the width of the face of the building facing the street.
- If loading or service space is between the street and the building it must not interfere with public use of the sidewalk. If space is provided for trucks to back up to a building, for example, the building must be set back adequately to avoid interference with the sidewalk.
- Trucks or other vehicles should not be normally parked or stored in front of buildings.
- Space for retail entries should be landscaped distinctively and clearly separated from service or loading areas.
- All other site guidelines for storefront commercial buildings apply to utilitarian commercial buildings, including parking and site lighting guidelines.

Mass and Scale

Façades of utilitarian commercial buildings may work best when designed in one of two ways: either as a retail façade across the entire street width with work space behind the retail area, or as a façade divided into retail and workspace fronts with the retail façade closer to the street and the workspace façade recessed.

Width

Utilitarian commercial buildings in Old Town tend to have wide street frontages. Wide buildings can better fit with the desired pedestrian scale when they are divided into smaller units of width.

- Long facades should include breaks
- Buildings that are wider than 50 feet across the street façade should use a change in design features to suggest traditional building widths. Stepping a section of a building back further from the street is an effective way to break the façade width. Other methods for articulating breaks in width include changes in facade material, window design, facade height or decorative details.

Height

Unlike the storefront buildings, utility commercial buildings are usually one rather tall story in height.

- Buildings should be one or two stories in height. An elevation break, with a retail area two stories in height and a workspace one story in height may be appropriate.

Design Guidelines: Residential building type

Residential style buildings may be built in the Broadway character area and are the only type of building that may be built in the neighborhood character area. Existing residential buildings may also be converted to business use with additions or remodeling. The design guidelines for residential style buildings are intended to protect and enhance the character of the neighborhood adjacent to the core commercial area of Old Town. New construction, remodeling, or additions should incorporate traditional residential forms including roof lines, building mass, window and door patterns, and materials.

Site Guidelines

Parking

On-site parking for owners and employees, if possible on the property will ensure that on-street spaces are available for shoppers. Some properties may need to provide parking for customers also. Parking should be designed with sensitivity to neighboring properties and the residential character of the streets.

- On-site parking may not be located in the front yard. If located in the side yard, it must be no closer to the street than the mid-line of adjacent buildings.
- If parking is provided, the drive should not exceed 24 feet in width at the sidewalk. The sidewalk should be continuous across the driveway.
- If parking is not hidden behind the building, it should be screened with plantings or brick or stone walls.
- Garbage containers of any size should not be visible from the street.

Garages

Garages in the Old Town neighborhood have traditionally been modest in scale and have been set to the rear of lots..

- Garages should be set at least as far back as the mid-line of the house and any neighboring house. Setting garages behind the rear line of the house is preferred.
- No more than two garage bays or doors should be visible from the street.
- Garages should be subordinate in scale and height to the house on a property.
- Garage materials should be compatible with materials used on the house. Metal siding is not appropriate for cladding garages in the Old Town neighborhood.

Street Frontage

The traditional orientation of porches and doors to the street and sidewalk encourages pedestrian entry. This orientation should be enhanced in residential style buildings that are used for business purposes with wider walkways, attractive lighting, signage, and landscaping.

- Buildings should be set anywhere from 15 feet to 35 feet behind the right-of-way line.
- Walkways should clearly and directly lead to business entries and should be at least five feet wide. Patio space or other pedestrian connections between the public sidewalk and the building entry are encouraged if they use brick or other unit paving materials, are residential in scale, and incorporate planting.
- If parking is provided in the rear of a property, walkways should connect the street, the business entry, and the parking area.
- Landscaping should be simple, residential in scale and carefully thought out to emphasize the building façade, building entry and entry walk, and display windows.
- Canopy trees that shade the sidewalk and relate to the scale of the open character of the neighborhood are encouraged. Smaller trees that may obstruct views of entries, porches, or other building features should be carefully placed.

Site Lighting

Lighting on the sites of residential-style buildings should be in keeping with the scale and low lighting level typical for residential neighborhoods. The amount of area lit should be limited and focused on public entries.

- Residential-scale pole mounted lights with a total height between 10 and 14 feet, bollard lights, or other low level incandescent lights are recommended for lighting entry areas.
- Ground or pole-mounted high-intensity flood lights directed at buildings should not be used.
- Residential-scale pole mounted lights with a total height between 10 and 14 feet in parking areas and in spaces between building fronts and the street should be shielded to avoid glare.

Fences

Fences in front yards may be useful for controlling and directing pedestrian access and for providing detail interest in the pedestrian environment. Fences in rear and side yards may be useful for screening parking so that it does not impact neighboring properties.

- Front fences should be no more than four feet high and may be picket, plank, wrought iron, or welded and painted tubular steel. Brick or stone walls may also be used.
- From the mid-point of the building extending into the rear yard, fences may be up to six feet tall. The same types of fences allowed in the front may be used with the addition of wooden privacy fences.
- Chain link fences and concrete block walls may not be built.

Mass and Scale

Width

Neighborhood buildings are typically compact in their plan and may be deeper than they are wide. Existing widths fall in the range between 30 and 45 feet. These widths allow ample room on most lots for a driveway leading to the rear of the lot.

- New buildings in the neighborhood character area should not exceed 45 feet in width across the front wall plane. Additional width beyond 45 feet in new buildings or building additions is acceptable only if it is significantly stepped back from the front wall plane.
- Dividing the width of buildings into masses or sections that are equivalent to the width of a room is encouraged.

Height

Houses in the neighborhood are divided roughly equally between those that are one or 1 ½ stories in height and those that are two stories in height.

- New buildings should be one to two stories in height.
- Additions to existing buildings should respect the height of the existing building. If the addition is taller, then it should be set behind the existing building. In no case should an addition exceed two stories.

Roof Form

Roof forms in the neighborhood are traditionally simple with ether single or multiple gables and ridge lines. There are no flat-roofed, pyramidal-roofed or hip-roofed buildings on Adams or Washington Streets. Roof slopes vary between 9:12 and 12:12.

- New buildings or building additions should utilize gabled roof forms with slopes in the range found in the character area.
- Gables of two-story buildings may be parallel or perpendicular to the street.

- One-story buildings should turn the gable toward the street to maximize the visual presence of the building.
- Roofs should not make up more than 25% of the visible façade area.

Front Wall Plane

Residential or commercial buildings in the neighborhood character area should follow a traditional residential organization of a building's front wall plane. Elements of this organization may include stepped back sections of the main building mass, porches inset into the building mass or projecting out from it, clear articulation of building entries, and residentially-scaled windows.

Porches

Porches are a traditional element on houses in the Old Town neighborhood. They are roofed to provide shade and rain protection and are deep enough to accommodate furniture. New buildings should be built with porches that extend across at least half of the width of the façade. Full width or wrap around porches are encouraged.

- Porches should be roofed and the roof form should be in keeping with the rest of the building.
- Front porches should be open in character, not enclosed.
- Porches should be a minimum of six feet in depth.

Entries

Entries on neighborhood houses are typically subtle in appearance, but are clearly marked by their relationship to the rest of the façade. They may be centered in a façade or a section of a façade, or they may be located near a wall corner. They are positioned in relationship to windows and building masses in a way that is logical and harmonious. Residential doors typically have a window in the upper half of the door and are solid below.

- At least 1/3 of the surface of an entry door should be clear glass.
- Entries may be modified from the traditional residential door in the following ways: they may be full view glass, they may have sidelight windows for emphasis and to increase transparency, or a double residential style door may be used.
- Metal frame contemporary commercial style doors should not be used.

Windows

Windows in Old Town houses are double hung and vertical in orientation. Most are between 30” and 36” wide and between 60” and 72” tall. Windows are placed together in gangs when larger expanses of glass are desirable.

- Vertically-oriented double hung windows should be used on building elevations visible from the street.

- Windows may be ganged together to create display opportunities for a business, but should be done in a way that maintains the proportions of a façade.

- One commercial style display window may be incorporated into a façade if it does not disrupt the overall composition and balance of the front wall plane.

Details

Buildings in the area have traditionally been simple in style, with understated ornamentation. Most of the character in buildings comes from their overall shape, massing and proportion; from the placement and scale of windows and doors; from the surface relief provided by overhanging eaves, gables, and porch roofs, and from functional ornamentation such as corner boards, eave brackets, and porch posts.

- Most detailed elements should be associated with edges and projections: eaves, corners, and porches.

- Columns, handrails, brackets, and balustrades should be in keeping with the materials and style of the rest of a building.

Awnings

Awnings on residential buildings are traditionally scaled to individual windows and doors or across porches, but do not extend across multiple windows or doors.

- Commercial-style awnings may be used on residential –style buildings in the Broadway character area if they adhere to the guidelines for commercial awnings and do not obstruct architectural features.

- Residentially-scaled fabric awnings may be used over windows, doors, or porches in the Neighborhood character area.

- Commercial-style awnings should not be used on buildings in the Neighborhood character area.

Side Walls

Residential buildings are usually spaced away from neighboring buildings, making their side walls more visible from the street.

- Side walls should use the same materials, window patterns, and other details that are used on the front of a building.
- A business's main entrance could be located in a side wall so that it can be easily accessed from the street and from a parking area in the rear of the lot. In this case the entrance should be well connected with walks or patio paving and should be proportionately fitted into the side façade.
- A building projection could be constructed for an entry on a side wall. The projection should share roof slopes, details, and materials existing on the building.

Building Lighting

Residential level lighting is usually much lower than that used for commercial purposes. When businesses are located in converted houses in a residential neighborhood, lighting is a sensitive issue. The businesses need to provide enough illumination that they can be recognized as commercial enterprises, that there sign can be seen, and that walks and entries are well-enough lit to be safe. On the other hand, the light levels should not be in conflict with the ambience of a residential building and should not affect the quality of life for nearby residential properties.

- Up-lights with low intensity levels and set very close to building walls may be used.
- External light fixtures should be complementary to the design of the rest of a building.
- Light fixtures should be mounted so that the fixture projects out from the building and so that the light is aimed toward the building façade or sign.
- Lights concealed in porch ceilings, behind porch posts, or soffits and that illuminate architectural features or light entries and signs in a subtle fashion are encouraged.
- Business lights should be turned off when normal business hours are over to avoid disrupting the comfort of neighborhood residents.

Sign Guidelines

A sign program or sign master plan should coordinate all signs on a building so that signs have the appropriate effect with minimum clutter and so basic information about a business is quickly comprehended. The information provided should be carefully thought out so that that the prominence of signs corresponds to the importance of the information.

Signs serve three functions. One is to attract attention, the second is to identify the business, and the third is to provide information about the business. The building itself should be the primary way to draw attention. A façade that is well-designed and maintained is the best sign that can be had for any business. Signs should be subordinate to architectural features.

Identifying signs should be the most prominent signs on a building and should very simply state the name of the business or should indicate the type of business with a symbol. Informational signs may give more information about special services offered or a range of products. This information should be in much smaller letters and occupy less sign area.

Sign types

Six basic sign types are described in this section. Most businesses will have a limited combination of types whose choice should depend on the architectural character of a building, its relationship to the street and sidewalk, and the nature of the business. When multiple sign types are used, each type of sign should have a particular message to deliver and should not repeat information from other sign.

Flat signs

On traditional storefront commercial buildings, signs were most often mounted to fit within architectural features. Many buildings have a sign board, which is a horizontal flat surface above the store windows and below any molding that divides the first and second floors, or above the molding and below the second floor windows. Buildings that do not have a sign board will still have a set of proportions or patterns within which a sign can be harmoniously fitted.

- Signs mounted on buildings should not project above the roof, parapet, or cornice.
- Signs should not obscure architectural features and should be dimensioned to emphasize or harmonize with existing patterns such as window and door dimensions.
- Signs attached to buildings should not overlap multiple building floors, they should emphasize the division between floors.
- Attached signs should not be inferior in quality to the materials of the building.

Projecting signs

A projecting sign is attached to a building face and is mounted perpendicular to the façade. Projecting signs lend themselves to cut-out or three-dimensional shapes or may be simple lettered signs.

- Projecting signs should be a maximum of ten square feet.
- The bottom of projecting signs should be between seven feet and ten feet above the sidewalk or ground surface.
- Signs should project no more than five feet out from a building face.

Free-standing signs

Free-standing signs are particularly suited for businesses that are set back from the street, such as houses converted into business use. Free standing signs may be pole mounted, or set on a base on the ground, or be an object such as a carved stone that is set directly on the ground.

- Free standing signs should be no taller than ten feet measured to the top of the highest sign or mounting feature.
- Poles with cross arms are suggested as the most appropriate free-standing sign

type

in the Neighborhood character area.

Awning signs

Words or graphics can be sewn, woven, or painted onto the bottom valance of an awning or on the face of a steeply sloped awning. Awning signs are especially useful when one building houses multiple businesses because they can be related to the door or windows of each business.

- Awning signs should be externally illuminated.

Window signs

Window signs serve as a method of supplying additional brief information or repeating a business name near eye level.

- Window signs should be composed of letters and logos affixed directly on glass or hung just inside the glass; they should not be printed on paper sheets attached to windows.
- Window signs should not obscure the view into a shop or display window.

Sandwich boards

Sandwich boards are an appropriate way to provide temporary information or specials. They should not be used as a substitute for other more permanent identifying or

informational signs.

- Sandwich boards must not obstruct pedestrian walks, parking, or driving lanes.
- Sandwich boards should be no taller than 42 inches.

Materials and Colors

Sign materials should be compatible with the design and materials of the building where the sign is placed. Carved or painted wood, steel or other metals, or creative combinations of materials are encouraged for signs. Quality, originality, and creativity in a sign is a reflection of the nature of the business that it advertises.

- Sign colors should be coordinated with building colors.
- Simplicity is encouraged.
- Shapes or symbols without words are encouraged for identifying signs.
- Neon may be used inside windows to create lettering, outlines or symbols.
- Promotional neon signs supplied by product distributors will not be approved.