3.4 Post Construction Stormwater Control Fact Sheets (PTP)

Post Construction Stormwater Control Practices	3.4.1 **Sand Filters**
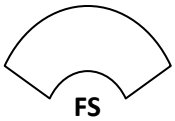 **Symbol** **TSS Reduction:** 80%	 **Figure PTP-01- 1** Surface Sand Filter Showing the sedimentation (foreground) and the filter bed (background) *Source, Center for Watershed Protection and Stormwater Managers Resource Center.*
Description	Sand filters are structural water quality control devices that capture and temporarily store, treat, and release stormwater runoff by passing the stormwater through a sand media. Sand filters consist of two main components: a pretreatment basin and filtration chamber. The pretreatment basin removes floatable materials and heavy sediments, and helps reduce flow velocities. The filtration chamber traps and strains pollutants, and in some instances allows the microbial removal of pollutants. Target pollutants for sand filters include suspended solids, suspended particulates, biochemical oxygen demand (BOD), fecal coliform bacteria, and others. The pretreatment basin and filtration chamber must also include an underdrain collection system to return stormwater to a conveyance system, and may also include or be enhanced by one or more of the following components: grass buffer strips, ponding area, sand bed, and plant material. Sand filters types documented in this fact sheet include: ➢ Surface sand filters ➢ Underground sand filters ➢ Perimeter sand filters

Applications

Sand filters are often used to manage stormwater runoff from urban areas where space is limited, and can be applied to areas where retrofit is needed, and are typically suitable in the following applications:

- Small stabilized drainage areas up to 5 acres (up to 10 acres for surface sand filters)
- Areas with low sediment loads and high pollutant loads
- Impervious area runoff – well suited for greater than 50% impervious area
- Off-line facilities adjacent to parking lots
- Underground installation
- Retrofit applications

Sand filters are **not** suitable in the following applications:

- Water *quantity* control
- Within drainage areas that have not been stabilized
- Residential applications
- Adjacent to areas with slopes greater than 5:1 (H:V) or 20%
- Areas that experience continuous flow from surface water, groundwater, sump pumps, or other sources

The use of sand filters as a retrofit practice primarily depends on existing infrastructure and the compatibility of existing storm drain inverts that need to connect to the filter under-drain outflow. In general, four to six feet of elevation above the existing collection system invert is needed for sand filter retrofits (2-3 feet is needed for perimeter filters). Underground sand filters are excellent for ultra-urban settings where space is at a premium.

Sand filters should only be applied in stabilized drainage areas, as heavy sediment loads from construction areas will clog and disable the filter. Likewise, they should not be used in areas where stormwater has the potential for high silt or clay content, and areas with a high water table. As a guide, sites implementing sand filters should have over 50% impervious cover in the drainage area.

Sand filters are designed for off-line use to capture the water quality volume (WQ_V). A diversion structure such as a flow splitter or weir may be necessary to separate and route the WQ_V to the sand filter, allowing larger stormwater flows to bypass the water quantity control device. For designs where no flow splitter is used, the recommended contributing drainage area should be limited to about 0.5 acres with an overflow at the filter to pass part of the WQ_V to a stabilized watercourse or storm drain. Where a flow splitter will be used, the flow splitter should allow 75% of the WQ_V to enter the filter system before allowing flows to bypass the system to a stabilized outlet. The sand filter can be adjusted to minimize bypassing before filling the filter to 75% of the WQ_V by adjusting the elevation of the overflow weir between the sedimentation and filter chambers so that the overflow weir elevation is lower than the flow splitter weir elevation. Sand filters are most effective when turbulent flow is minimized and the flow is spread uniformly across the filter media.

Sand Filter Variations

Sand filters are an excellent stormwater treatment practice with the primary pollutant removal mechanism being filtering and settling. Less significant processes can include evaporation, infiltration, transpiration, biological and microbiological uptake, and soil absorption. While it is possible to design sand filters to discharge a portion of the effluent to the ground water, applications in Bowling Green are typically designed as enclosed systems that discharge to a specific discharge location due to the widespread presence of karst geology.

- **Surface Sand Filters**

Figure PTP-01- 2 Surface Sand Filter
Showing the sedimentation (foreground) and the filter bed (background)
Source, Stormwater Managers Resource Center.

Surface sand filters are open-air, at-grade structures that serve as off-line water quality systems and include two system components. A flow diversion such as a flow splitter diverts runoff into the off-line surface filter. The first component is a sediment forebay or sedimentation chamber. Flow enters the forebay where heavier sediment particles settle out of suspension. This pre-treatment forebay may be either wet or dry. A perforated standpipe moves pre-treated runoff from the first component to the second. The second component is a filter bed chamber or filtration chamber with an approximately 18-inch thick sand bed. Runoff is temporarily stored above the bed, with pollutants filtered out at the bed surface. The top bed surface is covered with either sand or grass. Runoff exiting the bed bottom is collected by the underdrain system and discharged to the outflow.

Surface sand filters are suitable for multiple location types and use different configurations. For effective pollutant removal with surface sand filters, the contributing drainage areas should be no more than 10 acres. The two components may be designed using riprap, excavations with earthen embankments, a concrete structure or a block structure. For earthen embankments, the bottom and side slopes of the earthen walls should be lined with a permeable filter fabric before installing the filtration system and underdrain. See Figures PTP-01-3, PTP-01-4 and PTP-01-5 for the typical surface sand filter schematics.

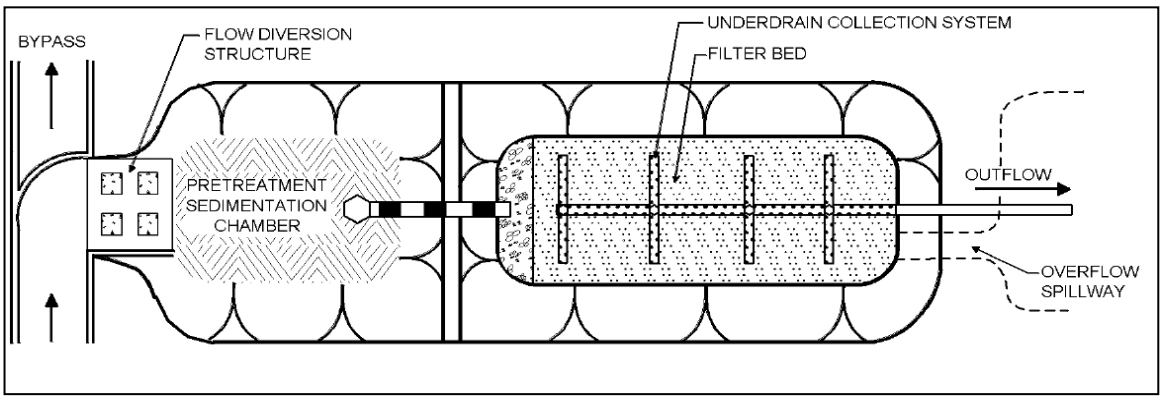

Figure PTP-01- 3 Surface Sand Filter
Source, Georgia Stormwater Management Manual

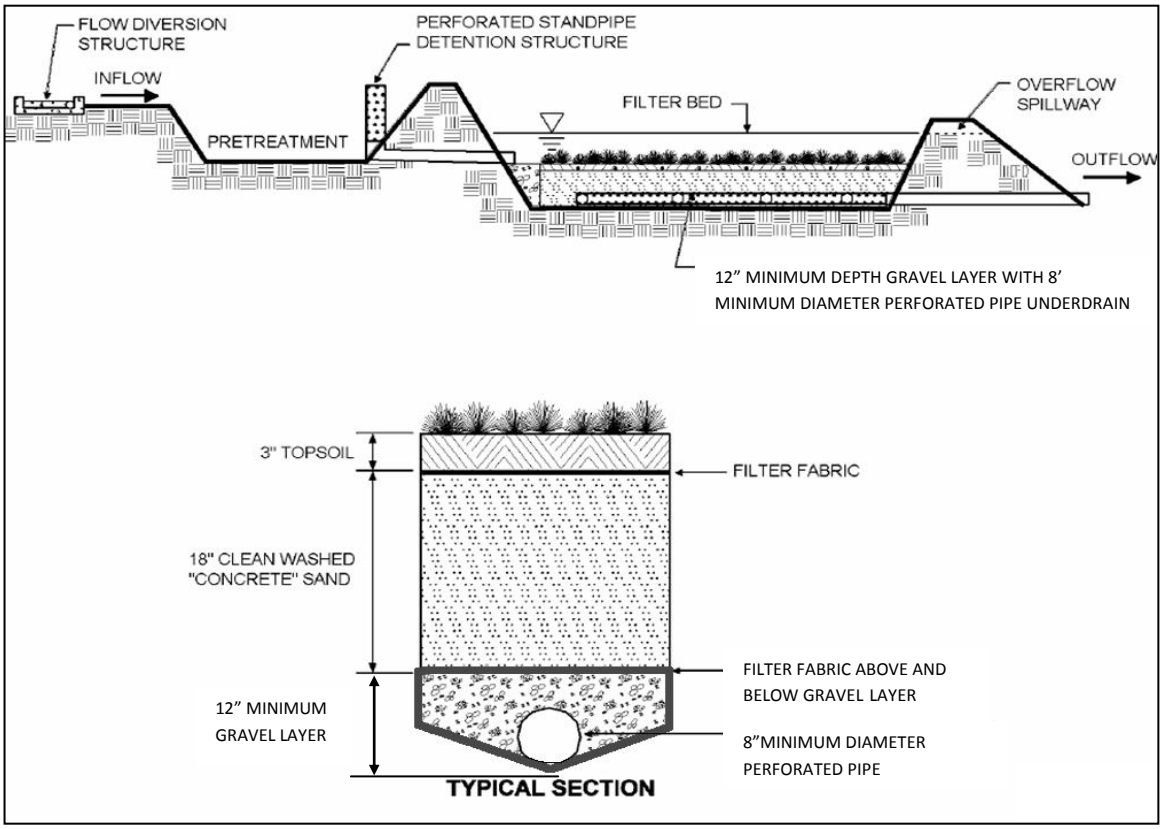

Figure PTP-01- 4 Surface Sand Filter (cross sectional view)
Source, Georgia Stormwater Management Manual

Sand Filter Variations

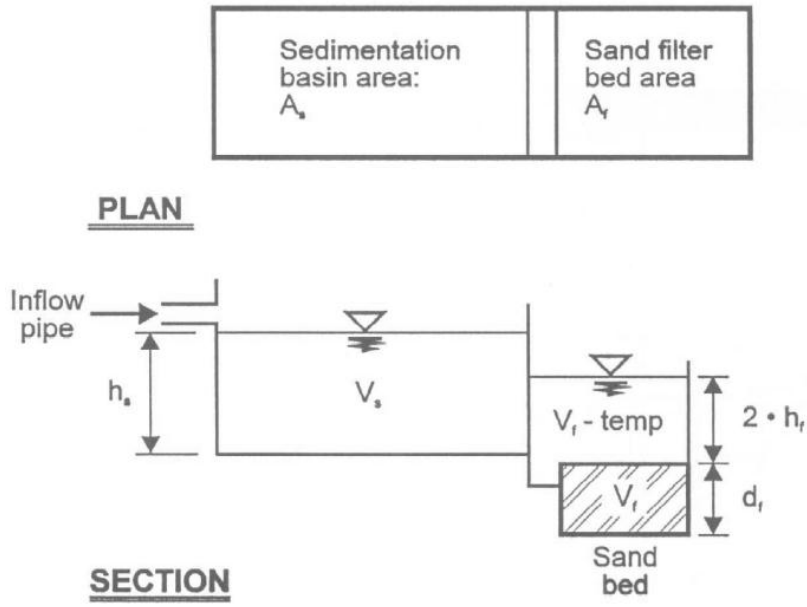

V_s = Sedimentation basin volume
V_f = Volume of voids in the filter bed
$V_{f\text{-temp}}$ = Temporary volume stored above the filter bed
A_s = Surface area of the sedimentation basin
A_f = Surface area of the filter media
h_s = Depth of water in the sedimentation basin
h_f = Average depth of water above the filter media
d_f = Depth of the filter media

Figure PTP-01- 5 Surface Sand Filter (cross sectional view)
Source, Georgia Stormwater Management Manual

Sand Filter Variations

➢ **Perimeter Sand Filters**

Figure PTP-01- 6 Perimeter Sand Filter
Source, Stormwater Managers Resource Center, _____

Figure PTP-01- 7 Perimeter Sand Filter
Showing pre-cast concrete form with 2 chambers
Source, Stormwater Managers Resource Center, _____

Sand Filter Variations

➢ **Perimeter Sand Filters (cont.)**

Perimeter sand filters are constructed just below grade with two enclosed parallel trench-like chambers. Ty pically, perimeter sand filters are installed along the perimeter of a parking lot for off-line treatment. The first chamber is a sedimentation chamber that also has a shallow permanent pool of water. The second chamber is a filtration chamber that contains the sand filter (depth 12 – 18 inches) as well as an underdrain system that discharges filtered runoff to the outflow location. The first and second chambers are separated by an overflow weir. Runoff from impervious areas enters the device via an inlet grate and first fills the sedimentation chamber. Once water levels in the sedimentation chamber reach the top of the overflow weir between the two chambers, flow spills over the weir and into the filtration chamber. The sand bed filters runoff, and runoff is then collected by the perforated pipe and gravel underdrain system for discharge to the outflow location. During storm conditions, runoff normally temporarily ponds in the two chambers until both chambers fill up to capacity. Once both chambers are filled to capacity, excess runoff is routed to a separate bypass drop inlet.

Perimeter sand filters consume a small amount of surface space, and are ideal for small impervious areas, particularly hot spot applications and retrofits. Perimeter sand filters are best suited for effective pollutant removal for drainage areas up to 2 acres. The perimeter sand filters should be constructed along the boundary, or perimeter, of an impervious area (i.e., a parking lot). See Figures PTP-01-8 through PTP-01-11 for typical perimeter sand filter schematics.

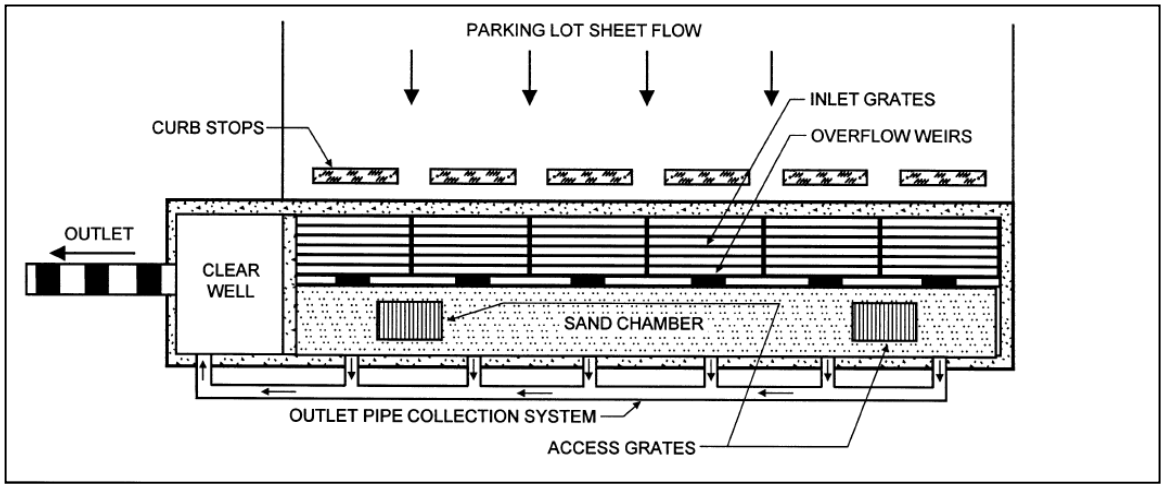

Figure PTP-01- 8 Perimeter Sand Filter
Source, Georgia Stormwater Management Manual

Sand Filter Variations

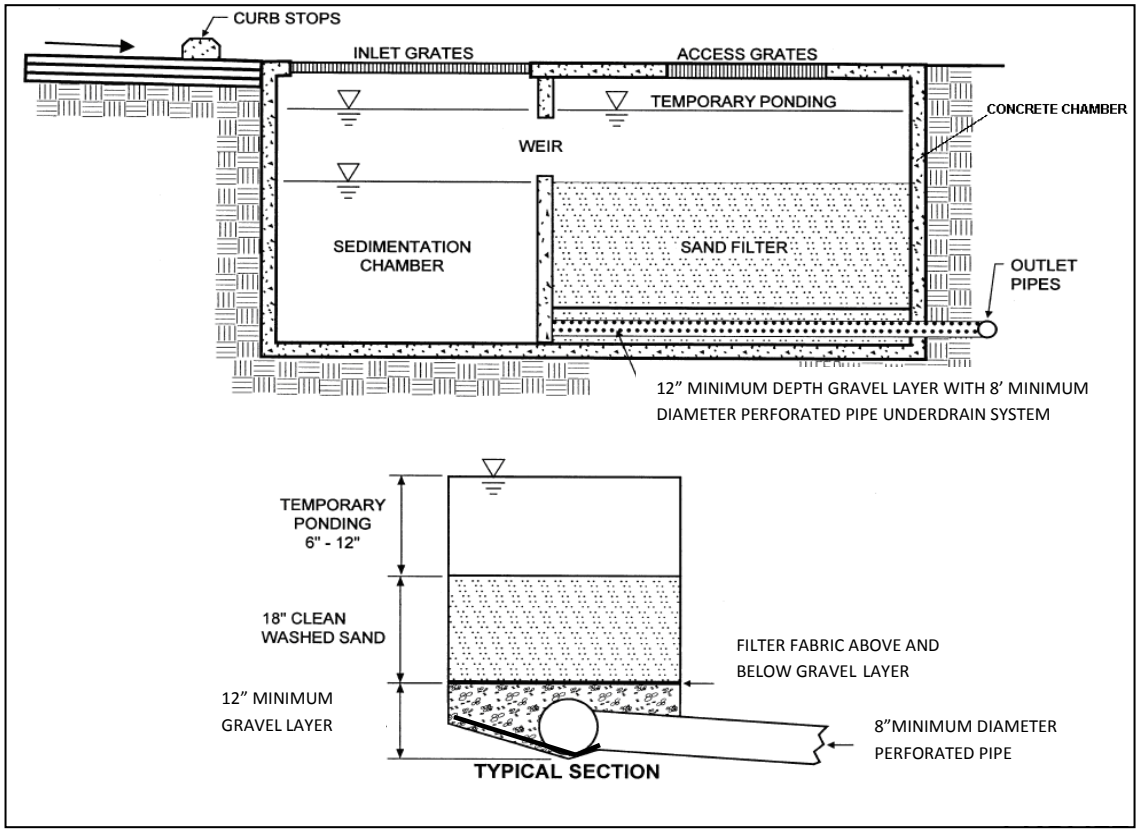

Figure PTP-01- 9 Perimeter Sand Filter (cross sectional view)
Source, Georgia Stormwater Management Manual

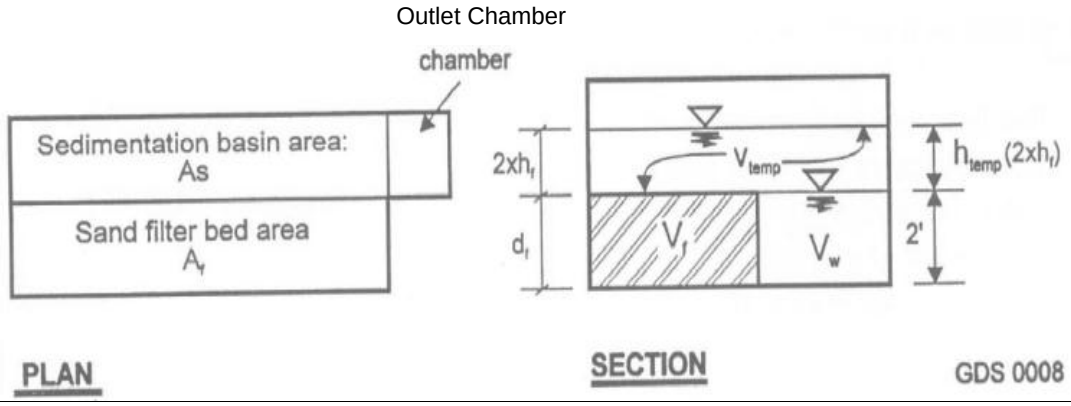

V_w = Wet pool volume of the sedimentation basin	A_f = Surface area of the filter media
V_f = Volume of voids in the filter bed	h_s = Depth of water in the sedimentation basin
V_{temp} = Temporary volume stored above the filter bed	h_f = Average depth of water above the filter media (½ h_{temp})
A_s = Surface area of the sedimentation basin	d_f = Depth of the filter media

Figure PTP-01- 10 Perimeter Sand Filter Chamber Design
Source, Georgia Stormwater Management Manual

Sand Filter Variations

➢ **Perimeter Sand Filters (cont.)**

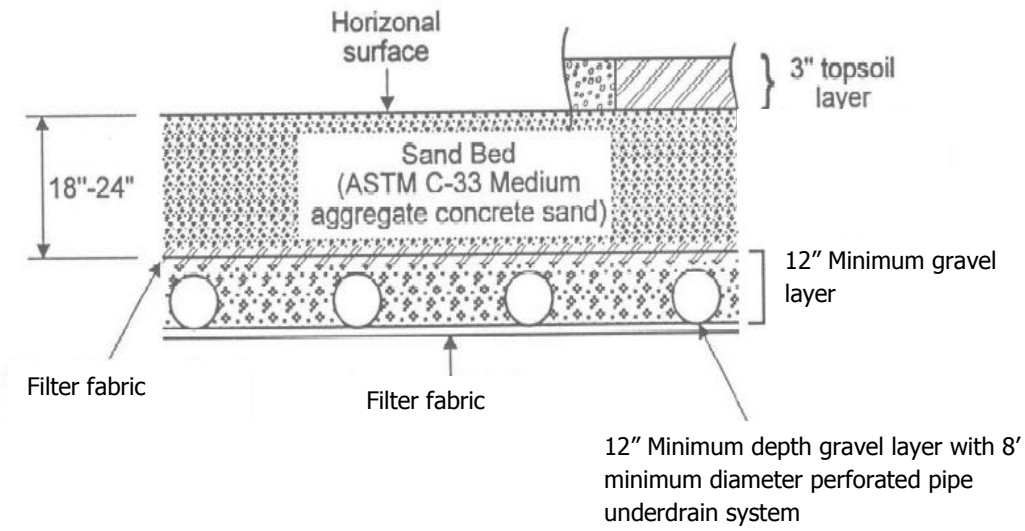

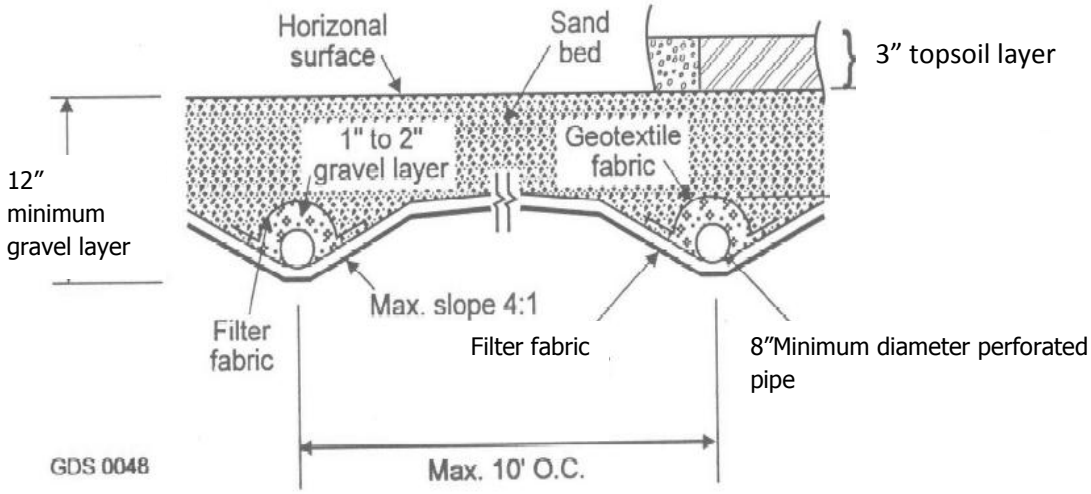

Figure PTP-01- 11
Source, Georgia Stormwater Manual

Sand Filter Variations

➢ Underground Sand Filters

Figure PTP-01- 12 Underground Sand Filter
Source, University of Virginia Stormwater and Watershed Group

Underground sand filters are designed for applications with extreme space constraints or high density areas such as parking lots where a surface sand filter cannot be constructed due to space limitations. They are typically used as on-line systems for impervious areas of 1 acre or less. An underground sand filter should not be designed to treat a drainage area greater than 5 acres. Underground sand filters may be used to effectively remove pollutants for drainage areas up to 2 acres. One key consideration for underground sand filters is accessibility for inspection and maintenance. Access is often provided by manholes or grate openings.

This type of filtration system utilizes a three-chamber vault, where the first two chambers temporarily store and treat runoff, and the third chamber collects the filtered runoff. For a storm event, the water quality volume is temporarily stored in both of the first two chambers. When flows exceed the filter's capacity in the first two chambers, the overflows are diverted through an overflow weir to exit the filter.

Each of the underground sand filter chambers performs a separate function. The first chamber is known as a sedimentation chamber or a wet pool chamber. This first chamber provides pre-treatment with a wet pool as well as temporary runoff storage. The first chamber is connected to the second chamber by either a submerged wall or an inverted elbow. This connection between the first two chambers helps obstruct oil and floatables from passing from the first chamber into the second chamber. The second chamber is called the sand filter or filter bed chamber. The second chamber's filter bed depth should be between 18 to 24 inches. Permeable geotextiles or a gravel screen may be used to limit filter bed clogging. The second chamber also contains a perforated drain pipe to collect and pass the filtered runoff to the third chamber. The third chamber, or the overflow chamber, discharges the filtered runoff as well as any overflows to the outlet. See Figures PTP-01-13 and PTP-01-14 for schematics of a typical underground sand filter.

Sand Filter Variations

➢ **Underground Sand Filters (cont.)**

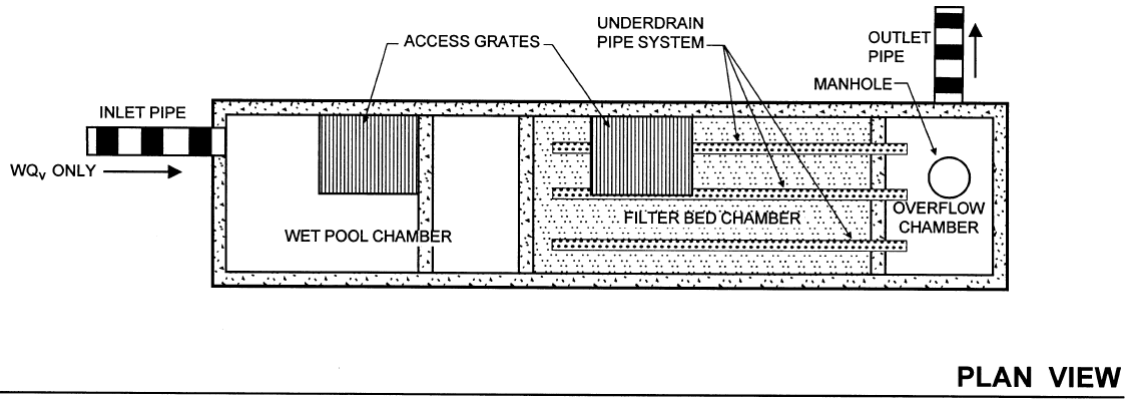

Figure PTP-01- 13 Underground Sand Filter
Source, Georgia Stormwater Management Manual

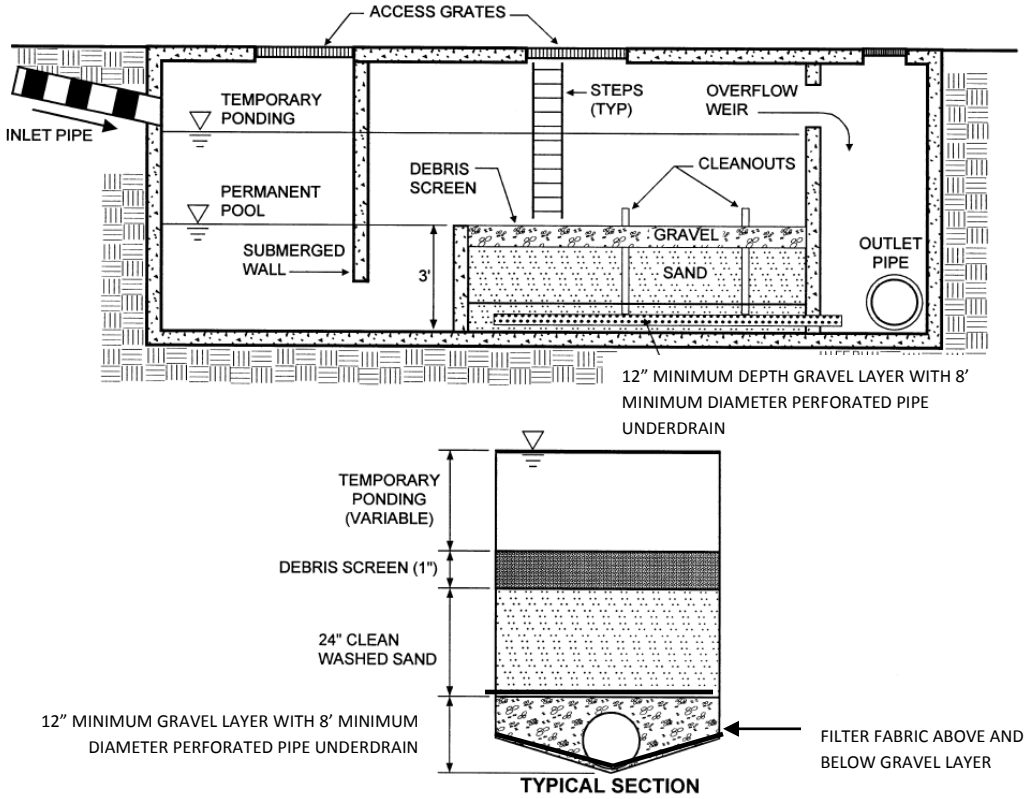

Figure PTP-01- 14 Underground Sand Filter (cross sectional view)
Source, Georgia Stormwater Management Manual

Maintenance

Maintenance Plan

A site-specific maintenance plan describing maintenance responsibilities shall be developed. that addresses the following items:

- Maintenance access for appropriate equipment, vehicles, and personnel.
- Operating instructions for drawdown valves, gates and removable weirs (if applicable)
- Vegetation maintenance schedule
- Inspection checklist
- Maintenance agreement between the facility owner and the City with these items:
  - Sediment removal from sedimentation chamber when sediment depth is ½ of the total depth to the outlet, or is greater than 12 inches (whichever is less)
  - Clean and/or repair sediment chamber outlet devices if drawdown times exceed 48 hours
  - Trash and debris should be removed as necessary
  - Sediment accumulations exceeding one inch should be removed from the bed
  - If filtering capacity is substantially diminished (i.e., for surface filters, water ponds on filter surface for more than 48 hours, remove and replace the top three inches of filter media with same fresh media and acceptably dispose of removed material)
- Grass cover filters should be mowed as needed (maximum grass height of 12 inches)

Monthly

- Remove trash or debris from drainage area, inlets, outlets and filter system
- Check that drainage area is stabilized and mowed (with clippings removed), with measures in place to minimize oil/grease and sediment released to filter system
- Inspect the filter surface for clogging monthly and after storm events greater than one inch (sand filters – rake the first inch of sand)
- For pre-treatment chambers with a permanent water level (e.g., perimeter sand filter), check the pre-treatment chamber for leakage and for retention of the normal pool level

Quarterly/After Major Storm Events

- Monitor water level in sand filter chamber (underground sand filter)

Annually

- Check filter bed and sediment chamber sediment depths

Maintenance

Annually (continued)

- Inspect concrete and grates (perimeter sand filters)for deterioration and damage
- Check inlets, outlets and overflow spillway for proper operation and for erosion
- Repair or replace any damaged structural parts
- Stabilize any eroded areas
- Look for signs of flow bypassing the facility (the exception is the expected flow bypassing for high flow events)
- Check for noticeable odors detected outside the facility

3-5 Years

- Remove and replace the top 2-5 inches of media. High sediment yield or high oil and grease may require more frequent media removal/replacement

As Needed

- Clean out sedimentation chamber when sediment depth reaches 12 inches (underground sand filter)
- Clean and/or repair sediment chamber outlet devices if drawdown times exceed 48 hours
- Remove accumulated oil and floatables from the sedimentation chamber (underground sand filter)
- For clogged or partially clogged sand beds (i.e., water ponds on filter surface for more than 48 hours), remove the top three inches of sand from the surface, till, or cultivate the bed, and replace with fresh sand meeting the appropriate design specifications
- Properly dispose of any material generated during maintenance activities.
- Grass cover filters should be mowed as needed (maximum grass height of 12 inches)
- Replace clogged filter fabric

Inspection Checklist

All appropriate items should be checked on the inspection checklist. If an applicable item does not meet the condition on the checklist, maintenance and/or repairs should be implemented to correct the situation.

As Needed

- ❑ Accumulated oil and floatables were removed from the sedimentation chamber (underground sand filter)
- ❑ Filtration system (sand bed, filter fabric, etc.) is not clogged or partially clogged
- ❑ Sediment depth in sedimentation chamber is less than ½ of the total depth to the outlet or is less than 1.5 feet 12 inches (whichever is greater)
- ❑ Filter's drawdown times do not exceed 48 hours
- ❑ The top 2-5 inches of media material has been removed and replaced within the past 3-5 years (if the system has been operational for 3-5 years)

Monthly

- ❑ Contributing area, facility, inlets, and outlets are clear of debris
- ❑ Contributing area is stabilized and mowed, with clippings bagged or removed and with measures in place as needed to minimize oil/grease and sediment released to system
- ❑ For filters with grass cover, grass height is less than 12 inches
- ❑ Filter surface is not clogging – also inspect after moderate/major storm events (> 1")
- ❑ Activities in the drainage area minimize oil/grease and sediment entering the system
- ❑ Permanent water level is not present (for perimeter sand filter)
- ❑ For filtration systems utilizing a permanent pool in a pre-treatment chamber, the chamber or vault does not leak, and normal pool water surface elevation is retained

Quarterly

- ❑ For underground sand filters, water level in sand filter chamber is acceptable

Annually

- ❑ Filter bed is clean of sediment, and the sediment chamber contains no more than 6 inches or 50% depth of sediment, whichever is less (or 12 inches for underground sand filters)
- ❑ There are no eroded areas that require stabilization
- ❑ There were no signs of flow bypassing the filter (except for expected high flow bypass)
- ❑ No evidence of deterioration, spalling, or cracking is present on concrete
- ❑ Inspect grates, where applicable
- ❑ Structural parts are free of damage and do not need repair or replacement
- ❑ Flow is not bypassing the filtration system
- ❑ No noticeable odors are detected outside of the facility.

Design Criteria

All sand filters:

- The drainage area size typically dictates the sand filter size, with a preferred drainage area between 0.5 – 2 acres. Maximum drainage area limits are as follows:
  - Surface sand filter maximum of 10 acres
  - Perimeter sand filter maximum of 2 acres
  - Underground sand filter maximum of 2 - 5 acres
- Sloped areas immediately adjacent to the sand filter system should be no greater than 5:1 (H:V) nor less than 1% to promote positive flow toward the system.
- The sand filter system surface slope should not exceed 1%, to promote even distribution of flow throughout the system.
- The sand filter system should be designed such that it is drained within 48 hours from the peak water level in the system.
- Most sand filters are configured off-line, so that flows greater than the water quality volume (WQ_V) capacity can be diverted downstream. The exception is underground sand filters, which are typically designed on-line.
- Sand filters require pre-treatment. Most sand filters will use a sediment chamber for pretreatment.
  - The recommended minimum length to width ratio for the sediment chamber is 2:1.
  - Inlet and outlet structures should be built at opposite ends of the sedimentation chamber.
  - The minimum wet pool volume required in the sedimentation chamber should be calculated using $V_W = A_S$ x 3 feet.
- Sand filters must include appropriate elevation differences and head considerations.
  - For most sand filters, the recommended elevation difference between the inflow and the outflow is between 4-6 feet.
  - For perimeter sand filters, the elevation difference may be 2-3 feet.
  - Sand filters typically require 2-6 feet of head.
- A minimum of 3 feet of separation is required between the sand filter bottom and seasonally saturated soils. A 5-foot separation is recommended between the sand filter bottom and seasonally saturated soils.
- During construction, disturbed areas draining to the sand filter should be identified and stabilized as soon as possible as they may clog the filter bed. Flow should not be directed into the sand filter until after impervious area construction is completed and pervious areas have established, dense, healthy vegetation.

Design Criteria

All sand filters (cont'd):

- Safety considerations must be considered and included in the design.
  - Mosquito breeding risks should be reduced for surface systems by ensuring that the structure dewaters within 72 hours.
  - Fencing may be desirable or required to limit entry. Measures that are more than 5 feet deep require OSHA safe construction health and safety guidelines.
- Site access for maintenance should also be considered in the design process.
- For sand filters located in sensitive areas (i.e., potential stormwater hotspots), additional treatment practices are recommended for partial treatment during the winter when the filter bed may be frozen.
- The filtration system must be designed to temporarily hold a capacity equal to or greater than 75% of the water quality volume (WQ_V) of the system prior to filtration.

Surface sand filters:

- The sedimentation chamber must have a capacity to hold 25% of the water quality volume (WQ_V), and have a ratio of 2:1 (H:V).
- Required space is a function of available head at the site for surface filters.
- Grass covers for surface filters should use grasses suited for withstanding frequent periods of inundation and drought.
- Protect underground sand beds from trash accumulation by placing a wide mesh geotextile screen on the sand bed surface. This screen may be rolled up, removed, cleaned and reinstalled during maintenance.

Perimeter sand filters:

- The sedimentation chamber should be sized to accommodate at least 50% of the calculated WQ_V.
- For perimeter sand filters with grates, the grates should be heavy so that the grates are not easily removed.
- The permanent pool depth in the sedimentation chamber should consider factors such as mosquito control and maintenance requirements.

Underground sand filters:

- Underground filters have little or no surface space requirements except for access. No building structures should be located above underground filters.
- Underground sand filters would require entry by individuals with confined space entry training.

Design Criteria

Underdrain system:

- Sand filters must use an underdrain/collection system to carry flow to another conveyance element. This system should contain a minimum 8-inch perforated PVC pipe surrounded by a 12-inch thick gravel layer. Increasing the diameter of the underdrain makes freezing less likely, and provides a greater capacity to drain standing water from the system.

Design Components

- ***Pre-treatment*** – Pre-treatment areas function to capture and remove coarse sediment particles from runoff prior to runoff entering the treatment component. Incorporation of pre-treatment helps to reduce required maintenance for the treatment component and reduces the potential for filter clogging. These pre-treatment areas vary in name depending on the sand filter type used. For sand filters located in sensitive areas (i.e., potential stormwater hotspots), additional treatment practices are recommended for partial treatment during the winter when the filter bed may be frozen. Pre-treatment component information specific to the sand filter type are presented in the following bullet sections:
  - ***Surface Sand Filters*** – The sedimentation chamber must have a capacity to hold 25% of the water quality volume (WQ_V).
    - The chamber must also have a ratio of 2:1 (H:V) and have a minimum length to width ratio of 2:1.
    - The chamber inlet and outlet structures should be located at opposite ends of the chamber.
    - The minimum wet pool volume required in the sedimentation chamber should be calculated using $V_W = A_S$ x 3 feet.
  - ***Perimeter Sand Filters*** **-** The sedimentation chamber should be sized to accommodate at least 50% of the calculated WQ_V.
  - ***Underground Sand Filters*** **–** Underground filters have little or no surface space requirements except for access.
    - No building structures may be located above the underground filters.
    - Underground sand filters would require entry by individuals with confined space entry training.

- ***Treatment*** – The treatment areas house the sand filters, which remove pollutants.
  - ***General Requirements –***
    - Sloped areas immediately adjacent to the sand filter system should be no greater than 5:1 (H:V) nor less than 1% to promote positive flow toward the system.
    - The sand filter system surface slope should not exceed 1%, to promote even distribution of flow throughout the system.
    - The sand filter system should be designed such that it is drained within 48 hours from the peak water level in the system.

Design Components

- The filtration system must be designed to temporarily hold a capacity equal to or greater than 75% of the water quality volume (WQ_V) of the system prior to filtration.
- For sand filters located in sensitive areas (i.e., potential stormwater hotspots), additional treatment practices are recommended for partial treatment during the winter when the filter bed may be frozen.
- Required space is a function of available head at the site for surface filters. Except where discussed below for specific filter types, the recommended elevation difference between the inflow and the outflow is between 4-6 feet.
- Use Darcy's law to size the filter bed area. The permeability coefficients (k) for different filter materials are shown below:

  (l) Sand - 3.5 ft/day

- The filter media for all sand filters should include a minimum layer depth of 18 inches of clean, washed, medium sand (ASTM C-33 concrete sand).

- ***Surface Sand Filters*** – Grass covers for surface filters should use grasses suited for withstanding frequent periods of inundation and drought.
- ***Perimeter Sand Filters -***. For perimeter sand filters, the elevation difference may be 2-3 feet. The grates should be heavy so that the grates are not easily removed.
- ***Underground Sand Filters –*** Place filter beds for underground filters below the frost line to prevent the filtering medium from freezing during the winter.

➢ ***Underdrain/Collection System*** – Sand filters must use an underdrain/collection system to carry flow to another conveyance element. This type of underdrain system is recommended for tight impermeable soils where infiltration is limited. Otherwise, refer to the guidance for "hot spot" areas discussed below.

- For areas that are known as potential stormwater "hot-spots" (e.g., gas stations, transfer sites, and transportation depots), the underdrain system must also include an impervious liner designed to reduce or eliminate the possibility of ground water contamination. This type of facility should consider how to address accidental spills. For instance, the underdrain discharge point can be blocked and the objectionable materials maybe siphoned through an observation well and safely contained.
- The underdrains should be equipped with a minimum 8-inch perforated PVC pipe surrounded by a 12-inch thick gravel layer. Increasing the pipe diameter decreases the potential for freezing. The porous gravel layer promotes drainage and is less susceptible to frost heaving than media with smaller particle size.
- The gravel shall be washed and 1-1/2" in size or clean, washed aggregate at a diameter no greater than 3.5 inches and no less than 1.5 inches. The porous gravel layer prevents standing water in the system by promoting drainage.

Design Components

- The minimum slope of the underdrain system is $^{1}/_{8}$-inch per foot (1% slope)
- A minimum of 3 feet of separation is required between the bottom of the sand filter and seasonally saturated soils.
- A permeable filter fabric must be placed between the gravel layer and the filter bed material. The filter fabric does not need to extend to the side walls. The filter fabric may be installed horizontally above the gravel blanket, extending just
  1-2 feet on either side of the underdrain pipe below.
- Do ***not*** wrap the under-drain with filter fabric.
- A permeable filter fabric must also be placed between the underdrain gravel layer (beneath the perforated pipe) and the native soil material under the filter system. Note that permeable fabric will allow potential infiltration into the native soil material beneath the filter system. For scenarios where this infiltration is not desirable, use an impermeable liner as described for "hot spot" land use areas.
- Pipe perforations must be sized approximately 3/8 inch in diameter spaced at 6-inch intervals on center. At a minimum, 4 holes per row should be used, and pipe grade placement should be at least 0.5%. Pipes should be spaced no more than 10 feet on center.

Design Procedure

Step 1 – Make a preliminary judgment as to whether site conditions are appropriate for the use of a sand filter system, and identify the sand filter type and function in the overall treatment system. This includes performing an initial suitability screening for the site.

- Consider basic issues for initial suitability screening, including:
  - Site drainage area
  - Site topography and slopes
  - Soil type and infiltration capacity
  - Depth to water table and bedrock
  - Site location/minimum setbacks
  - Presence of active karst features
  - % Impervious Area
  - Intermittent Flow
  - Sufficient Flow Elevation Difference
  - Proposed development use (Is development commercial, industrial, or institutional?)
- Determine how the sand filter system will fit into the overall stormwater treatment system.
  - Decide whether the sand filter system will be the only BMP to be employed, or if there are other BMPs addressing some of the treatment requirements.
  - Decide where on the site the sand filter system is most likely to be located.

Step 2 – Confirm design criteria, site constraints, and applicability.

- Determine the design criteria that will be used.
- Determine any constraints the site will place on the sand filter system such as:
  - High pervious area in the drainage area
  - Limited amount of surface area available for treatment
  - High water table
- Determine the TSS reduction provided, using the equations below for weighted TSS reduction, $TSS_{weighted}$, and TSS treatment train, TSS_{train}. The minimum TSS reduction required for the site is 80% and can be weighted for the site.

$$\%TSS_{\text{weighted}} = \frac{\sum_{n}^{1}(TSS_1 A_1 + TSS_2 A_2 + \ldots + TSS_n A_n)}{\sum_{n}^{1}(A_1 + A_2 + \ldots + A_n)}$$

Where runoff is treated by two or more BMPs in series, the TSS reduction provided is calculated with the following equation for a treatment train:

$$TSS_{train} = A + B - \frac{(A \times B)}{100}$$

Design Procedure

Where A is the TSS reduction provided by the first BMP and B is the TSS reduction provided by the next BMP.

Step 3 –Select a sand filter type based on the initial suitability screening, design criteria, site constraints and applicability. Perform field verification of site suitability.

- The field verification should be conducted by a qualified geotechnical professional.

Determine the depth to groundwater. A minimum of 3 feet of separation between the bottom of the sand filter system and seasonally saturated soils (or from bedrock) is required (5 feet of separation is recommended).

Step 4 – Compute runoff control volumes and peak flows.

- Calculate the Water Quality Volume (WQ_V).

$$WQ_v = [P\ Rv)(A)]/12$$

Where:

P = 1.1 inches

R_V = 0.05 + 0.009(I), where I is the percent impervious cover A = the area of imperviousness, (acres)

- The volume of voids in the sand filter's underdrain system may be subtracted from the WQ_V. The volume of voids should be estimated at 35% of the total volume of the underdrain system.
- Calculate the peak flow for the Water Quality Volume (Q_{WQ}), 25 yr peak runoff rate (Q_{P25}), and the 100 yr peak runoff rate (Q_{P100}). Refer Appendix B for more information on Q_{P25} and Q_{P100}.
  - Determine the peak flow for Water Quality Volume (Q_{WQ}).

$$Qwq = C \times I_{WQ} \times A$$

Where:

Q_{WQ} = the water quality volume peak flow, (cfs)

C = the runoff coefficient

I_{WQ} = the rainfall intensity, 2.45 in/hr

A= the area of imperviousness, (acres)

The common reference used for runoff coefficients is Design and Construction of Sanitary and Storm Sewers, American Society of Civil Engineers and the Water Pollution Control Federation, 1969.

Note that designs for managing Q_{P25} and Q_{P100} must be consistent with the City-County Planning Commission requirements and are not addressed in this manual. Information about these requirements is contained in Section 2.4.7.

Design Procedure

Note: Steps 5-12 are iterative

Step 5 – Size flow diversion structure, if needed.

- A flow regulator or flow splitter should be used to divert WQ_V into the sand filter system.
- The most common approach used is setting a bypass weir within the diversion based on the elevation of the water quality volume within the system.
- Size low flow orifice, weir or other device to pass WQ_V.

STEP 6 – Size the filtration basin (sand filter) chamber..

- The filter area is sized using the following equation (based on Darcy's Law):

$$A_f = (WQ_v)\,(d_f) / [(k)\,(h_f + d_f)\,(t_f)]$$

Where:

A_f = surface area of filter bed, (ft^2)

WQ_V = Water Quality Volume, (ft^3)

NOTE: The volume of voids in the sand filter's underdrain system may be subtracted from the WQ_V. The volume of voids should be estimated at 35% of the total volume of the underdrain system.

d_f = filter bed depth, (ft) - minimum depth is 18 inches, maximum depth is 24 inches

k = coefficient of permeability of filter media, (ft/day) use 3.5 ft/day for sand

h_f = average height of water above filter bed, (ft)

t_f = design filter bed drain time, (days) - 2 days or 48 hours maximum

- Use these calculations to set the preliminary dimensions for the filtration basin chamber. See the Design Criteria for filter media specifications.

STEP 7 – Size the sedimentation chamber.

- Sedimentation chamber size is based on volume requirements, maximum ponding depth and the particle settling ability.
- **Surface sand filter:** The sedimentation chamber should be sized to at least 25% of the computed WQ_V and have a length-to-width ratio of 2:1. The Camp-Hazen equation is used to compute the required surface area:

$$A_s = -(Q_o/w) * \ln(1-E)$$

Where:

A_s = sedimentation basin surface area (ft^2)
Q_o = rate of outflow = the WQ_v over a 24-hour period
w = particle settling velocity (ft/sec)
E = trap efficiency

Design Procedure

Assuming:

- E = 90% sediment trap efficiency (0.9)
- w = particle settling velocity (ft/sec) = 0.0004 ft/sec for imperviousness < 75%
- w = particle settling velocity (ft/sec) = 0.0033 ft/sec for imperviousness ≥ 75%
- average of 24 hour holding period

Then:

$$A_s = (0.066)\ (WQ_v)\ ft^2 \text{ for } I < 75\%$$

$$A_s = (0.0081)\ (WQ_v)\ ft^2 \text{ for } I \geq 75\%$$

Where:

I = percent impervious

Perimeter sand filter:

The sedimentation chamber should be sized to hold at least 50% of the computed WQ_v. Use same approach as for surface sand filter.

- Use Table PTP-01-1 to set the preliminary surface area for the sedimentation chamber (settling chamber). Select the filter type, drainage area imperviousness and the maximum ponding depth.

Table PTP-01- 1 Sedimentation Chamber (Settling Chamber) Surface Area

Sand Filter		**Maximum Ponding Depth (feet)**	
		<4	4-10
Impervious	≥75%	$(0.25*WQ_v)/D_{max}$	$(0.25*WQ_v)/D_{max}$
	<75%	$(0.25*WQ_v)/D_{max}$	$(0.066*WQ_v)/D_{max}$
Perimeter Sand Filter		**Maximum Ponding Depth (feet)**	
		<7.5	8-10
Impervious	≥75%	$(0.5*WQ_v)/D_{max}$	$(0.5*WQ_v)/D_{max}$
	<75%	$(0.5*WQ_v)/D_{max}$	$(0.066*WQ_v)/D_{max}$

STEP 8 – Compute V_{min} (the minimum volume that can be stored within the filtration chamber).

$$V_{min} = 0.75 * WQ_v$$

STEP 9 – Compute storage volumes within the entire facility as well as the sedimentation chamber orifice size.

Surface sand filter:

$$V_{min} = 0.75\ WQ_v = V_s + V_f + V_{f\text{-}temp}$$

- V_f = water volume within filter bed/gravel/pipe

$V_f = A_f * d_f * n$, where:

  - n = porosity = 0.35 for filter material including gravel as specified in Design Criteria and Design Components

Design Procedure

- $V_{f\text{-}temp}$ = temporary storage volume above the filter bed

  $V_{ftemp} = 2 * h_f * A_f$

- V_s = volume within sediment

  chamber $V_s = V_{min} - V_f - V_{f\text{-}temp}$

- h_s = height in sedimentation

  chamber $h_s = V_s/A_s$

- Ensure that h_s and h_f fit the available head and that the other dimensions still fit. Make iterative changes as necessary in design until all site dimensions fit.
- Size the orifice that carries flow from the sedimentation chamber to the filter chamber so that V_s is released within 24 hours at an average release rate with 0.5 h_s as the average head.
- Design the outlet structure with perforations that allow for a safety factor of 10.
- Size distribution chamber to spread flow over filtration media – level spreader weir or orifices.

Perimeter sand filter:

- V_f = water volume within filter bed/gravel/pipe

  $V_f = A_f * d_f * n$

  Where: n = porosity = 0.35 for filter material including gravel as specified in

  Design Criteria and Design Components

- V_w = wet pool storage volume

  $V_w = A_s$ * wet pool depth

- Minimum wet pool depth = 2 feet
- Vf_{temp} = temporary storage

  volume $Vf_{temp} = V_{min} – (V_f + V_w)$

- h_{temp} = temporary storage

  height h_{temp} = = Vf_{temp} / (A_f +

Design Procedure

- Ensure $h_{temp} \geq 2 * h_f$, otherwise decrease h_f and re-compute. Ensure that the dimensions fit the available head and area. Change as necessary in design iterations until all site dimensions fit.
- Size distribution slots from sediment chamber to filter chamber. The elevation and size of these distribution slots should consider the desired permanent pool elevation as well as factors such as mosquito control and maintenance requirements. A minimum pool depth of 2 feet should be maintained in the sediment chamber.

STEP 10 – Design inlets, pre-treatment facilities, underdrain system and outlet structures according to Design Criteria and Design Components.

- Pre-treatment of runoff is provided by the sedimentation chamber. Surface sand filter inlets should be provided with energy dissipaters. Sedimentation chamber exit velocities must be non-erosive.
- The outlet pipe should connect the facility's underdrain system with the facility's discharge location. Outlet protection is not generally necessary due to the slow rate of filtration. The exceptions are that emergency overflows and spillways may require outlet protection.

Surface sand filters:

- The surface sand filter must include an emergency or bypass spillway that will safely pass flows that exceed the design storm flows.
- The emergency spillway location should be sited away from downstream buildings and structures that could be impacted by the spillway discharge.
- The surface sand filter inlets should include energy dissipaters.
- This spillway prevents the filter water levels from overtopping the embankment and causing structural damage.

STEP 11 – Compute the overflow weir sizes.

Surface sand filters:

- Size overflow weir at elevation h_s in sedimentation chamber (above perforated stand pipe) to handle surcharge of flow through filter system from 25-year storm.
- Plan inlet protection for overflow from sedimentation chamber.
- Size the overflow weir at elevation h_f in filtration chamber (above perforated stand pipe) to handle surcharge of flow through filter system from 25-year storm.

Perimeter sand filter:

- Size the overflow weir at the end of the sedimentation chamber to handle excess inflow, set at WQ_v elevation.

STEP 12 - Check volume, peak discharge rates and period of inundation against any applicable state, local and other requirements.

- Water quality volume (WQ_v) - If the filtration system does not meet the requirement to treat the WQ_v, the sand filter's storage volume must be increased or the excess part of the WQ_v must be treated with another BMP (either upstream or downstream).

Design Procedure

- The sand filter must be able to discharge through the filter media in no more than 48 hours. Any additional flows that cannot be filtered within 48 hours should be routed to bypass the system to a stabilized discharge location.
- If the sand filter does not meet the period of inundation requirements, one approach to meet the inundation requirement is to increase the filter surface area (decrease the height of water above the filter bed). Another approach is to add one or more additional BMPs that reduce the portion of the WQ_v treated by the sand filter, which also changes the water level range for the sand filter.
- The 48-hour window considers the following factors: wet-dry cycling between rain events, unsuitable mosquito breeding habitat, suitable conditions for vegetation (where applicable), aerobic conditions and storage for back-to-back precipitation events.

STEP 13 – Prepare Vegetation and Landscaping Plan

- All sites must include plan information that includes completing impervious area construction and establishing dense and healthy vegetation for pervious area before stormwater is introduced into the sand filter.
- For surface filters with vegetation and organic filters, a Vegetation and Landscaping Plan should be prepared. The landscaping plan should address how the filter surface will be stabilized and how vegetation will be established. The vegetative cover must be able to withstand frequent periods of inundation and drought.

STEP 14 – Prepare operations and maintenance plan

Prepare the sand filter's operations and maintenance plan based on the guidance given in the Maintenance Section.

STEP 15 – Complete the Design Summary Table

Design Parameter	Required Size	Actual Size
Sand Filter Type:		
WQ_v:		
A_f:		
Filtration Basin (LxW)		
A_s:		
Sedimentation Basin (LxW)		

Example Design

Figure PTP-01- 18 Sand Filter Design Example Site Plan.

Proposed development of an undeveloped site into an office building and associated parking.

Table PTP-01- 2 Sand Filter Design Example Site Base information.

Base Data	**Hydrologic Data**	
Site Area = 3.54 ac	Pre	Post
Total drainage = 5.0 ac	CN 71	89
Soils Type "C"		
	WQ_v Depth = 1.1 in	
Pre-Development		
Impervious Area = 0 ac; or I = 0%	**Precipitation**	
Meadow (CN = 71)	I_{WQ}	2.45 in/hr
Post-Development	2yr, 24hr	3.54 in
Impervious Area = 1.72 ac; or I = 1.72/3.54 = 49%	25yr, 24hr	5.88 in
Open Space, Fair (CN = 79)	100yr, 24hr	7.43 in
Paved parking lots, roofs, driveways, etc. (CN =98)		

Example Design

This example focuses on the design of perimeter sand filter facilities to meet the water quality treatment requirements of the site. Peak flow reduction is not addressed in this example other than quantification of preliminary storage volume and peak discharge requirements. In general, the primary function of sand filters is to provide water quality treatment and not large storm attenuation. As such, flows in excess of the water quality volume typically bypass the facility or pass through the facility. Where quantity control is required, the bypassed flows can be routed to conventional detention pond (or some other facility such as underground storage vaults).

Problem: Design a post-construction stormwater water quality treatment plan for this site. A dry detention pond will be constructed to meet the required detention standards and will provide 60% TSS reduction for the site. The total drainage area to the pond is 5 acres. Try designing one or more perimeter sand filter systems in or near the parking areas in addition to the dry detention pond to achieve the required 80% TSS reduction.

Step 1 – Make a preliminary judgment as to whether site conditions are appropriate for the use of a sand filter system, and identify the sand filter type and function in the overall treatment system. This includes performing an initial suitability screening for the site.

- Consider basic issues for initial suitability screening, including:
  - The site has type "C" soils
  - There are no minimum setbacks
  - There are active karst areas on the site. The sand filter systems will not be located close to the sinkhole.
  - The total drainage to the detention pond is 5 acres.
  - The site's topography, slopes, flow elevation difference and depth to water table and bedrock will support installation of sand filter systems away from active karst areas.
  - The percentage of impervious area is 49%.
  - The proposed development is a commercial office building with associated parking.
- Determine how the sand filter system will fit into the overall stormwater treatment system.
- The proposed sand filter systems will be part of a treatment train for TSS removal. A dry detention pond will be constructed to meet the required detention standards and will provide 60% TSS reduction for the site. The perimeter sand filters provide 80% TSS reduction when used as a single BMP. Try 2 sand filters:
  - The desired sand filter systems are perimeter sand filters. These units may be located under parking areas.
  - Try 2 sand filters, as noted above.
    - Sand filter 1 – 1.02 acres drainage
    - Sand filter 2 – 0.7 acres drainage
  - The treated water quality volume will be collected by an underdrain system and routed to the dry pond located in the northwest corner of the site for water quantity control. Flows greater than the water quality volume will bypass the perimeter sand filter systems and be routed to the dry pond for water quantity control and final polishing prior to discharging.

Example Design

Figure PTP-01-19 Sand Filter Design Example Impervious Drainage Areas and Filter Locations.

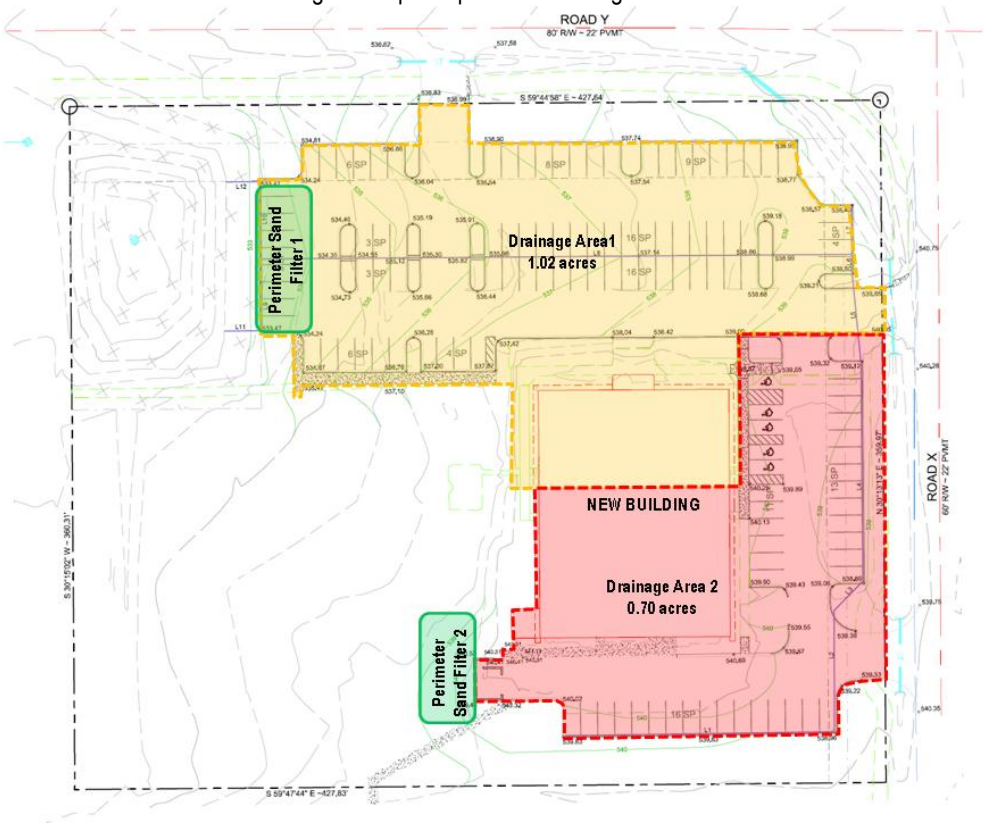

Step 2 – Confirm design criteria, site constraints, and applicability.

- The following minimum criteria will be used in the design.
  - The desired sand filter bed depth is 18 inches (1.5 feet).
  - Maximum 36 hour drain time from peak water level
  - Minimum 8-inch diameter underdrain enveloped in a 12-inch gravel layer
  - Minimum 3 foot separation from bottom to seasonally saturated soils
  - The percentage of pervious area and the percentage of impervious area in the contributing drainage area are nearly equal (49% impervious, 51% pervious).
  - The contributing drainage areas to each sand filter do not include large amounts of pervious area (i.e., drainage from pervious areas is routed around the contributing areas to the sand filters). This approach reduces the potential for clogging the sand filters.

Example Design

- **TSS removal** – The required TSS removal is a minimum of 80% reduction for average annualpost-development load. All site areas drain toward the dry detention pond. Impervious site areas drain through the two perimeter sand filters en route to the dry detention pond. The total impervious area for this site is 1.72 acres. The %TSS removal is calculated using a treatment train for each of the impervious areas to show the combined effects of both the sand filters and the dry detention pond.

$$\%TSS = \frac{80 + 60 - (80 \text{ x } 60)}{100}$$

%TSS = 92% ✓

Therefore, the combination of two perimeter sand filters with the dry detention basin does meet the requirement for at least 80% TSS removal.

Step 3 –Select a sand filter type based on the initial suitability screening, design criteria, site constraints and applicability. Perform field verification of site suitability.

- The site geotechnical investigation showed that both the northwest and the south potential perimeter sand filter locations were suitable for installing sand filters.
- The soil borings indicated that the underlying soils in the vicinity of the sand filter locations had limited infiltration capacity and that the high water elevation was a minimum of 8 feet or more below the parking lot at both the northwest and south locations. This depth to the water table elevation is sufficient to maintain the minimum 3-foot separation between the bottom of the sand filter and the high water elevation.
- No impermeable layers/lenses or bedrock was encountered during the geotechnical field evaluation of the site.
- The site has a sinkhole in the location where the dry detention is proposed. The throat will be improved and used as the primary spillway for the detention pond.

Step 4 – Compute runoff control volumes and peak flows.

- Calculate the Water Quality Volume (WQ_V). This WQ_V calculation will be performed using each of the two contributing areas to allow individual sand filter sizing.

Sand Filter 1:

$$WQ_v = [(P\ R_v)(A)]/12$$

Where:

P = 1.1 inches

$R_v = 0.05 + 0.009(I)$

I = 49

$R_v = 0.05 + 0.009(49) = 0.491$

$A_1 = 1.02$ acres

WQ_{v1} = (1.1in x 0.491 x 1.02ac)/12 = 0.046 acre-ft = 2000 ft^3

Example Design

FIRST ITERATION:

Step 5 – Size flow diversion structure, if needed.

- Since the perimeter filter system is a subsurface system, flows in excess of WQ_V will bypass the perimeter sand filter grates during higher runoff events. However, bypassing will not occur until the total volume, WQv, has been captured by the treatment mechanism of the sand filter. A separate drop inlet will be added beyond each perimeter sand filter system to convey runoff from these higher flow events to the dry detention pond once the perimeter sand filter reached maximum capacity.

STEP 6 – Size the filtration basin (sand filter) chamber.

- The filter area is sized using the following equation (based on Darcy's Law):

$$A_f = (WQ_v)\,(d_f) / [(k)\,(h_f + d_f)\,(t_f)]$$

Where:

A_f = surface area of filter bed, (ft^2)

NOTE: The volume of voids in the sand filter's underdrain system may be subtracted from the WQ_V. The volume of voids should be estimated at 35% of the total volume of the underdrain system. For the first design iteration, the volume of voids for the underdrain system is not included. However, the underdrain system's volume of voids will be subtracted from WQ_V in subsequent iterations.

d_f = filter bed depth, (ft) - minimum depth is 18 inches, maximum depth is 24 inches

k = 3.5, coefficient of permeability of filter media, (ft/day)

h_f = average height of water above filter bed, (ft)

t_f = design filter bed drain time, (days) - 2 days or 48 hours maximum

Sand Filter 1:

WQ_{v1} = 2000 ft^3

d_f = 18 inches = 1.5 feet

k = 3.5 ft/day

h_f = average height of water above filter bed, (ft)

Assume h_{max} = 2 feet for this site. Therefore, h_f = ½ h_{max} = 1 feet

t_f = 1.5 days

Af_1 = (2000 ft^3) (1.5 feet) / [(3.5 ft/day) (1 feet + 1.5 feet) (1.5 days)] = 228.6 ft^2

Round up to the nearest square foot to size for minimum surface area of filter bed of 229 ft^2.

Example Design

Sand Filter 2:

WQ_{v2} = 1373 ft^3

Assume h_{max} = 2 feet for this site. Therefore, h_f = ½ h_{max} = 1 feet

t_f = 1.5 days

Af_2 = (1373 ft^3) (1.5 feet) / [(3.5 ft/day) (1 feet + 1.5 feet) (1.5 days)] = 156.9 ft^2

Round up to the nearest square foot to size for minimum surface area of filter bed of 157 ft^2.

- Use these calculations to set the preliminary dimensions for the filtration basin chamber. See the Design Criteria for filter media specifications.

  Sand Filter 1:

  Set the filtration basin chamber at 46 ft x 5ft

  Sizing took into consideration minimum surface area requirements and the site's configuration.

  A_{r1} = 230 ft^2 ✓

  Sand Filter 2:

  Set the filtration basin chamber at 20 ft x 8 ft

  The location for Sand Filter 2 is more limited by site constraints such that the maximum filter length would be 20 feet.

  A_{r2} = 160 ft^2 ✓

Example Design

STEP 7 – Size the sedimentation chamber.

- For a perimeter sand filter, the sedimentation chamber should be sized to at least 50%of the computed WQ_v. The sedimentation chamber will be sized using an approach similar to that used for a surface sand filter.
- Table PTP 01-01 was used to set the preliminary surface area for the sedimentation chamber (settling chamber). The desired maximum ponding depth (D_{max}) used was 3 feet. The site's percentage of impervious area is 49%. A cross-section view for both sand filters is shown below.

Sand Filter 1:

A_{s1} = Surface Area of Sedimentation Chamber = $(0.5*WQ_{v1})/D_{max}$ = $(0.5*2000\ ft^3)/3$ feet

$A_{s1} = 334\ ft^2$ ✓

- For the sedimentation chamber, the preliminary dimensions will use the same length (46 feet) used for the filter chamber's preliminary dimensions. This would require that the sedimentation chamber's width be at least 8 feet to achieve the surface area calculated above. Using the preliminary dimensions, A_{s1} becomes 46 feet x 8 feet = 368 ft^2, and this value will be used for A_s in the subsequent calculations for the first iteration

Sand Filter 2:

A_{s2} = Surface Area of Sedimentation Chamber = $(0.5*WQ_{v2})/D_{max}$ = $(0.5*1373\ ft^3)/3$ feet

$A_{s2} = 229\ ft^2$ ✓

- For the sedimentation chamber, the preliminary dimensions will use the same length (20 feet) used for the filter chamber's preliminary dimensions. This would require that the sedimentation chamber's width be at least 12 feet to achieve the surface area calculated above. Using the preliminary dimensions, A_{s2} becomes 20 feet x 12 feet = 240 ft^2, and this value will be used for A_s in the subsequent calculations for the first iteration

STEP 8 – Compute V_{min} (the minimum volume that can be stored within the filtration chamber).

Sand Filter 1:

$$V_{min1} = 0.75 * WQ_{v1} = 0.75 * 2000\ ft^3 = 1500\ ft^3$$

Sand Filter 2:

$$V_{min2} = 0.75 * WQ_{v2} = 0.75 * 1373\ ft^3 = 1030\ ft^3$$

Example Design

Figure PTP-01-20 Sand Filter Design Example Cross Sectional View.

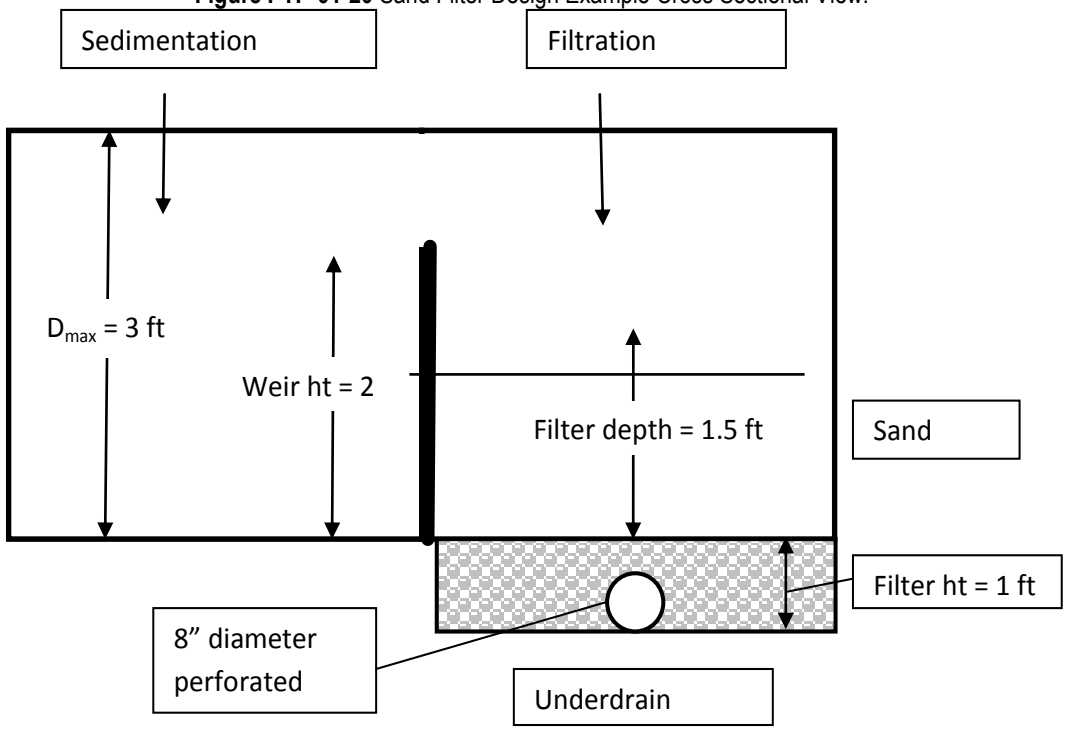

STEP 9 Compute storage volumes within the entire facility as well as the sedimentation chamber orifice size.

- Where: n = porosity = 0.35 for filter material including gravel as specified in Design Criteria and Design Components
- The filter layer depth (d_r) is the minimum depth of 1.5 ft.
- The minimum wet pool depth is 2 feet. For this design example, use the 2-foot minimum depth.

Sand Filter 1:

- Compute V_{f1} = water volume within filter bed/gravel/pipe = A_{f1} * d_f * n

$$V_{f1} = 230\ ft^2 * 1.5\ ft * 0.35 = 120.75\ ft^3$$

- Compute V_{w1} = wet pool storage volume = A_{r1} * wet pool depth

$$V_{w1} = 230\ ft^2 \times 2\ feet = 460\ ft^3$$

Example Design

- Compute Vf_{temp1} = temporary storage volume for Sand Filter 1 = V_{min1} – (V_{f1} + V_{w1})

  Vf_{temp1} = 1500 ft^3 – (120.75 ft^3 + 460ft^3) = 919.25 ft^3

- Compute h_{temp1} = temporary storage height for Sand Filter 1 = Vf_{temp1} / (A_{f1} + A_{s1})

  h_{temp1} = 919.25 ft^3/ (230 ft^2 + 368 ft^2) = 1.5 feet

- Check that $h_{temp1} \geq 2 * h_f$; 2 * hf = 2* 1.5' = 3 ft. For Sand Filter 1, the design fits the chamber.
- The distribution slots from the sediment chamber to the filter chamber were assumed to be similar in function to broad-crested weirs that allow flow to exit the sediment chamber and enter the filter chamber once the sediment chamber's water level reaches the minimum wet pool depth of 2 feet. The sedimentation and filter chambers then continue to fill up to D_{max} elevation. The D_{max} elevation was set assuming that the sediment chamber should be sized to hold 50% of WQ_v. These slots would be sized to handle the desired weir flow between the two chambers without allowing the sedimentation chamber's water level to reach the higher bypass weir elevation before the required WQv is contained in the two filter chambers. (Note that the minimum wet pool elevation affects the permanent pool elevation in the sedimentation chamber, required maintenance for the sedimentation chamber, mosquito control and possible undesirable odors due to the permanent pool elevation.)

Sand Filter 2:

- Compute V_{f2} = water volume within filter bed/gravel/pipe = A_{f2} * d_f * n

  V_{f2} = 160 ft^2*1.5 ft * 0.35 = 84 ft^3

- Compute V_{w2} = wet pool storage volume = A_{r2} * wet pool depth

  V_{w2} = 160 ft^2 x 2 feet = 320 ft^3

- Compute Vf_{temp2} = temporary storage volume for Sand Filter 2 = V_{min2} – (V_{f2} + V_{w2})

  Vf_{temp2} = 1030 ft^3 – (84 ft^3 +320 ft^3) = 626 ft^3

- Compute h_{temp2} = temporary storage height for Sand Filter 2 = Vf_{temp2} / (A_{f2} + A_{s2})

  h_{temp2} = 626 ft^3/ (160 ft^2 + 240 ft^2) = 1.6 feet

- Check that $h_{temp2} \geq 2 * h_f$ = 2 * 1.5 feet = 3ft.

Example Design

- The distribution slots from the sediment chamber to the filter chamber were assumed to be similar in function to broad-crested weirs that allow flow to exit the sediment chamber and enter the filter chamber once the sediment chamber's water level reaches the minimum wet pool depth of 2 feet. The sedimentation and filter chambers then continue to fill up to D_{max} elevation. The D_{max} elevation was set assuming that the sediment chamber should be sized to hold 50% of WQ_v.

STEP 10 – Design inlets, pre-treatment facilities, underdrain system and outlet structures according to Design Criteria and Design Components.

- **Design inlets** - The inlets to the perimeter filter system are the slotted grates. These grates will be located in the parking area, and must be capable of handling vehicle traffic. For safety, these grates must also be heavy enough so that the grates are not easily removed.
- **Design pre-treatment facilities** – The contributing drainage area to the perimeter sand filter is almost entirely impervious and has low potential for sedimentation. Therefore, no pre-treatment facilities will be installed prior to the perimeter sand filter.
- **Design underdrain system** - Install a 12-inch (1-foot) thick gravel layer with a perforated 8-inch diameter pipe underdrain collection system. The underdrain gravel will be washed and 1½" diameter. The underdrain system will include a 1% slope.
- **Design outlet structures** – The outlet pipes for both sand filter underdrain systems will discharge into the dry detention pond located in the northwest corner of the site.

  Sand Filter 1:

  The parking lot elevation is at approximately 533 feet near the perimeter sand filter location. With the 3-foot maximum depth for the sedimentation chamber, set the outlet pipe's outlet invert elevation into the dry detention pond at 530 feet. No outlet protection will be required at this outlet pipe, as sheer stress and velocities are non-erosive. A second overflow outlet pipe will discharge the overflow runoff collected by the drop inlet when flow conditions exceed the perimeter sand filter's capacity. The overflow outlet pipe will also discharge to the dry detention pond, and will require rock outlet protection as an energy dissipater. The outlet invert for overflow outlet pipe may be at a higher elevation than the sand filter's outlet pipe, but must be below 533 feet.

Example Design

Sand Filter 2:

The parking lot elevation is at approximately 540 feet near the Sand Filter 2 location. With the 3-foot maximum depth for the sedimentation chamber, the outlet pipe's outlet invert elevation into the dry detention pond will be no higher than 537 feet. The discharge from Sand Filter 2 and any overflow runoff will be conveyed overland to the dry detention pond in the northwest corner of the site. The overland area between Sand Filter 2 and the dry detention pond will be well-vegetated to reduce the potential for erosion. For the underdrain outlet pipe, no outlet protection will be required. A second overflow outlet pipe will discharge the overflow runoff collected by the drop inlet when flow conditions exceed the perimeter sand filter's capacity. The overflow outlet pipe will also discharge into the overland areas that drain toward the dry detention pond. Due to the anticipated concentrated flows and velocities at the overflow pipe outlet, rock outlet protection will be installed as an energy dissipater. The approximate slope from the pipe outlets to the dry detention basin is approximately 3%.

STEP 11 – Compute the overflow weir sizes.

- For a perimeter sand filter, the overflow weir is the weir at the end of the sedimentation chamber and allows flows above the weir elevation to enter the filtration chamber.
- The D_{max} for the sedimentation chamber is 3 feet for both sand filters, and defines the maximum chamber heights.
- The overflow weir between the sedimentation chamber and the filtration chamber sets the permanent pool elevation for the sedimentation chamber. The weir elevations for both filters were set at 2 feet above the bottom elevation of the sedimentation chamber to maintain a permanent pool depth that would discourage mosquito breeding here.
- For both perimeter sand filter systems, water levels above the top of the inlet grate would be diverted to the drop inlet for overflow. This flow diversion would not occur until the sand filter had filled to capacity.

STEP 12 – Check volume, peak discharge rates and period of inundation against any applicable state, local and other requirements.

- **Volume** – Both perimeter sand filters were sized to treat the required WQ_v as required by the City.
- **Peak discharge rates** – The peak discharge rate check for the site is more applicable for water quantity control rather than water quality control. The main control for the peak discharge rate is the dry detention pond.
- **Period of inundation** – The underdrain systems for both sand filters were designed using a dewatering time of 36 hours, which is less than the 48-hour maximum.

ADDITIONAL ITERATIONS:

The preliminary designs for both sand filters did not assume that the void space in the underdrain system would count toward the required WQ_v used to size each filter. The preliminary design dimensions could be further refined by subtracting the volume of voids in the underdrain system from the required WQ_v used to size each filter. This refinement may reduce the required filter size as well as other variables such as filter cost. The assumed void space (porosity) for the underdrain filter systems as discussed in the Design Criteria and Design Components is 35% or 0.35.

Example Design

STEP 13 – Prepare Vegetation and Landscaping Plan

Prior to installing the sand filters, all pervious areas will be stabilized with grass. No additional landscaping requirements apply to the sand filter.

STEP 14 – Prepare operations and maintenance plan

Complete the sand filter operations and maintenance plan based on the guidance given in the Maintenance Section.

STEP 15 – Complete the Design Summary Table

Design Parameter	Required Size	Actual Size
Sand Filter Type:	Perimeter Sand Filter 1	
WQ_v:		2000 ft^3
A_f:	228.6 ft^2	230 ft^2
Filtration Basin (LxW)		46ft x 5ft
A_s:	334 ft^2	368
Sedimentation Basin (LxW)		46ft x 8ft

Design Parameter	Required Size	Actual Size
Sand Filter Type:	Perimeter Sand Filter 2	
WQ_v:		1373 ft^3
A_f:	156.9 ft^2	160 ft^2
Filtration Basin (LxW)		20 ft x 8 ft
A_s:	229 ft^2	240 ft^2
Sedimentation Basin (LxW)		20 ft x 12 ft